Hausted® by graham-field

ESC2EYESTR SURGI-EYE CHAIR OPERATING MANUAL

SAVE THIS MANUAL FOR FUTURE USE.

HP_ESC2EYEST-INS-LAB-Revl26

CONTENTS

INTRODUCTION — A WORD FROM GF HEALTH PRODUCTS, INC. 4
INDICATIONS FOR USE 4
SERVICE INFORMATION 4
ADVISORY 4
1 LIST OF WARNINGS AND CAUTIONS 5
SIGNIFICANCE OF SAFETY STATEMENTS 5
DANGER / WARNING / CAUTION / NOTICE SUMMARY 5
WARNING: TO REDUCE THE RISK OF BURNS, FIRE, ELECTRIC SHOCK, OR PERSONAL INJURY 5
WARNING — CAUTIONS AND PROPER OPERATION 6
ELECTROMAGNETIC COMPATIBILITY (EMC) INFORMATION 7
2 UNCRATING INSTRUCTIONS 8
IMPORTANT — REPORT ANY SHIPPING DAMAGE IMMEDIATELY 8
NOTICE — POSSIBLE EQUIPMENT DAMAGE 8
WARNING — PERSONAL INJURY HAZARD 8
ENVIRONMENTAL CONDITIONS 8
OPERATING 8
STORAGE AND TRANSPORT 8
UNPACKING INSTRUCTIONS 8
3 OPERATING INSTRUCTIONS 9
3.1 ESC2EYESTR SPECIFICATIONS 9
ELECTRICAL SPECIFICATIONS 10
IDENTIFICATION LABEL 10
3.2 FEATURES, WARNINGS AND PROPER OPERATION OPERATING INSTRUCTIONS 11
WARNINGS — CAUTIONS AND PROPER OPERATION (SEE DIAGRAM ON FOLLOWING PAGE) 11
FEATURES (SHOWN IN ILLUSTRATION) 12
3.3 BRAKING AND STEERING OPERATION WITH SMART CASTER TECHNOLOGY 13
3.3.1 APPLYING THE BRAKES 13
3.3.2 UNLOCKING THE BRAKES 13
3.3.3 ACTIVATING STEER MODE — PENDANT 14
3.3.4 ACTIVATING STEER MODE – MANUALLY 14
3.3.5 DEACTIVATING STEER MODE — PENDANT 15
3.3.6 DEACTIVATING STEER MODE – MANUALLY 15
CASTER PEDAL POSITIONS 15
3.4 ELECTRIC CONTROL LOCATIONS 16
3.4.1 PENDANT CONTROL STORAGE LOCATION 16
3.4.2 PLUG LOCATION 16
3.4.3 LOW BATTERY ALARM / BATTERY LEVEL INDICATOR 16
3.4.4 FOOT CONTROL 17
3.4.5 MAIN POWER INDICATOR 17
3.4.6 SERVICE INDICATOR 17
3.5 HEIGHT AND PATIENT SURFACE ADJUSTMENT 18
3.5.1 HEIGHT (HI / LO) (BUTTONS 1 & 2) 18
3.5.2 BACK SECTION UP / DOWN (BUTTONS 3 & 4) 18
3.5.3 SEAT TILT UP / DOWN (BUTTONS 5 & 6) 19
3.5.4 LEG UP / DOWN (BUTTONS 7 & 8) 19
3.5.5 TRENDELENBURG, SUPINE, AND REVERSE TRENDELENBURG POSITIONS (BUTTONS 10, 12, & 14) 19
3.5.6 MEMORY AND PRESET FUNCTIONS (BUTTONS 9, 11, &13) 20
3.5.7 LOCK / UNLOCK (BUTTON 15) 20
3.5.8 HOME (BUTTON 16) 20
3.5.9 BRAKE & STEER MODE (BUTTONS 17 & 18) 20
3.5.10 EMERGENCY DROP BACK 21

3.6 ADJUSTABLE FOOTREST 21
3.6.1 REPOSITIONING THE FOOTREST 21
3.7 ADJUSTABLE LEG EXTENSION 22
3.7.1 REPOSITIONING THE MOTORIZED LEG EXTENSION 22
EXTENDING THE MOTORIZED LEG EXTENSION 22
RETRACTING THE MOTORIZED LEG EXTENSION 22
SAFETY LIMITS 22
OPERATION WHILE LEG EXTENSION IS EXTENDED (ANY DISTANCE) 22
OPERATION WHILE LEG EXTENSION IS RETRACTED 22
3.8 PIVOTING RAILS 23
3.8.1 REPOSITIONING THE RAIL 23
LOWERING THE PIVOTING RAIL 23
RAISING THE PIVOTING RAIL 23
3.9 HEADREST 24
3.9.1 ADJUSTING THE HEADREST 24
3.10 PUSH HANDLES 25
3.10.1 OPERATING THE PUSH HANDLES 25
ROTATING AND POSITIONING THE HAND GRIPS 25
OPERATING THE PUSH HANDLES WITH THE BACK IN RAISED POSITION 25
OPERATING THE PUSH HANDLES WITH THE BACK IN LOWERED POSITION 25
3.11 COMMON OPTIONAL ACCESSORIES 26
3.11.1 MOUNTING THE WRIST REST 26
3.11.2 ADJUSTING THE WRIST REST 26
3.11.3 INSTALLING IV ROD 26
3.11.4 USING SAFETY STRAPS 26
4 TROUBLESHOOTING GUIDE 27
4.1 CONTROL BOX 28
4.2 BATTERY REPLACEMENT 28
5 PREVENTIVE MAINTENANCE FOR THE USER 29
6 OPTIONAL ACCESSORIES 30
7 GF HEALTH PRODUCTS, INC. LIMITED WARRANTY FOR HAUSTED BRAND 31
8 DISPOSAL AND KEY TO SYMBOLS 32
DISPOSAL 32
KEY TO SYMBOLS 32
9 APPENDIX 33
9.1 GUIDANCE AND MANUFACTURER'S DECLARATION — ELECTROMAGNETIC EMISSIONS 33
9.2 ENCLOSURE PORT [1] 33
9.3 ENCLOSURE PORT IMMUNITY TO RF WIRELESS COMMUNICATIONS EQUIPMENT [1] 34
9.4 INPUT AC POWER PORT [1] 35
9.5 PATIENT COUPLING PORT [1] 36
9.6 SIGNAL INPUT / OUTPUT PARTS PORT [1] 37
9.7 RECOMMENDED SEPARATION DISTANCES BETWEEN PORTABLE AND MOBILE RF EQUIPMENT 38
9.8 CERTIFICATIONS 38
10 INDEX 39

COPYING PROHIBITED

This manual is protected by Federal Copyright Law, which provides for damages of up to USD $20,000, as well as criminal fines and imprisonment, for unauthorized copying.

© 2020 GF Health Products, Inc. All Rights Reserved Printed in U.S.A.

INTRODUCTION — A WORD FROM GF HEALTH PRODUCTS, INC.

This manual contains important information on proper use and maintenance of the Hausted ESC2EYESTR Surgi-Eye Chair. All personnel involved in the use and maintenance of this equipment must carefully review and comply with the warnings, cautions and instructions contained in this manual. These instructions are important to protect the health and safety of personnel operating the model ESC2EYESTR Surgi-Eye Chair, and should be retained in a conveniently accessible area for quick reference.

Complete instructions for uncrating and putting your new equipment in service, as well as equipment drawings, have been furnished. If missing, contact GF Health Products, Inc. for replacement copies, giving the serial number and model number of the unit.

GF Health Products, Inc. carries a complete line of accessories for use with these chairs; your representative will gladly review these with you.

Indications for Use

The Hausted ESC2EYESTR Surgi-Eye Chair is intended for use in patient treatment, transport or recovery. This product has an expected service life of five years.

The chair's back can be positioned from sitting to supine. Height positioning, as well as back, seat, and leg section adjustment, is electric/battery powered and is activated with a pendant. The motorized leg extension is controlled by a switch underneath the footrest end. Four steer casters allow maximum mobility and maneuverability, with control through either pendant or manual operation.

Service Information

A thorough preventive maintenance program is essential to safe and proper unit operation. This manual contains maintenance schedules and procedures which should be followed for satisfactory equipment performance.

We encourage you to contact GF Health Products, Inc. with maintenance concerns.

Advisory

A listing of the safety precautions to be observed when operating and servicing this equipment can be found in Section 1 of this manual. Do not operate or service the equipment until you have become familiar with this information. Any alteration of this equipment not authorized or performed by GF Health Products, Inc., could affect its operation, will void the warranty, could violate national, state, and local regulations, and could jeopardize your insurance coverage.

Info: *Column 1 below applies only if product was purchased outside the U.S.*

CE	EU REP **EU Authorized Representative:** **AR Experts BV** **Boeingavenue 209** **1119 PD Schiphol-Rijk** **The Netherlands** **www.ar-experts.eu**		**Manufactured by:** **GF Health Products, Inc.** **1 Graham Field Way** **Atlanta GA 30340-3140** **1.770.368.4700 Main** **1.770.368.2386 Fax** **www.grahamfield.com** **www.hausted.com**	⚠	**Class 1 Equipment** **Type B Equipment** **Equipment not suitable for use in the presence of flammable anesthetic mixture with air or oxygen or nitrous oxide.** **IPX5 (Water-resistant)** **Not suitable for continuous operation (Duty Cycle: 10% 2 Min in 18 Min**

Info: *The base language of this document is ENGLISH. Any translations must be made from the base language document.*

1 LIST OF WARNINGS AND CAUTIONS

⚠ **IMPORTANT: Before using the Hausted ESC2EYESTR Surgi-Eye Chair, please read and adhere to the following safety precautions and warnings. Failure to do so could result in serious personal injury or damage to the ESC2EYESTR Surgi-Eye Chair.**

Always consult your healthcare professional to determine safe methods most suitable for your individual abilities. Protect yourself, your attendant, and the Hausted ESC2EYESTR Surgi-Eye Chair by having it serviced regularly. If you experience any malfunction, contact your Graham-Field authorized distributor immediately, as a hazardous condition could result, causing personal injury or damage to the Hausted ESC2EYESTR Surgi-Eye Chair.

Periodic inspection, adjustment and replacement of worn parts are necessary to provide years of excellent service. Maintenance MUST be performed by qualified personnel ONLY.

SAVE THESE INSTRUCTIONS.

SIGNIFICANCE OF SAFETY STATEMENTS

Please note the following special statements, used throughout this manual, and their significance:

⚠ **DANGER: Indicates a potential hazard situation or unsafe practice that, if not avoided, will result in death or serious personal injury.**

⚠ **WARNING: Indicates a potential hazard situation or unsafe practice that, if not avoided, could result in death or serious personal injury.**

⚠ **CAUTION: Indicates a potential hazard situation or unsafe practice that, if not avoided, could result in minor or moderate personal injury.**

▲ **NOTICE: Indicates a potential hazard situation or unsafe practice that, if not avoided, could result in product or property damage.**

Info: *Provides application recommendations or other useful information to ensure that you get the most from your product.*

DANGER / WARNING / CAUTION / NOTICE Summary

The following is a listing of the safety precautions which must be observed when operating and servicing this equipment. These precautions are repeated (in whole or in part), where applicable, throughout the manual.

WARNING: To Reduce the Risk of Burns, Fire, Electric Shock, or Personal Injury

⚠ **DANGER: SHOCK HAZARD — To reduce the risk of electric shock, unit is to be serviced by qualified personnel only.**

⚠ **DANGER: SHOCK HAZARD — To avoid risk of electric shock, this equipment must only be connected to a supply mains with protective earth.**

⚠ **WARNING: LACERATION HAZARD — When cutting bands always use a tool specifically designed for that purpose. This will help to avoid personal injuries frequently incurred when bands are cut and tension released.**

WARNING — CAUTIONS AND PROPER OPERATION

⚠ **WARNING: The ESC2EYESTR Surgi-Eye Chair has a maximum patient weight capacity of 600 lb (272 kg), EVENLY DISTRIBUTED.**

⚠ **WARNING: The ESC2EYESTR Surgi-Eye Chair has a maximum weight, including equipment weight and maximum patient weight, of 865 lb (393 kg).**

⚠ **WARNING: The chair is not intended to replace a stretcher or gurney.**

⚠ **WARNING: The chair has warning labels on both the head and foot end stating: DO NOT sit on end — as tipping may occur.**

⚠ **WARNING: DO NOT stand on footrest — tipping may occur.**

⚠ **WARNING: When not in use, do not leave the chair in a recline position.**

⚠ **WARNING: When patient is seated in the chair, ensure the side rails are up and the patient is secured with patient safety straps.**

⚠ **WARNING: Patient entry, egress and transfer from the chair should always be from the center side rail location with the side rail in the down position and the brakes locked.**

⚠ **WARNING: At no time should the patient be permitted to enter or exit from the ends of the chair when in partial or total recline position.**

⚠ **WARNING: Ensure the brakes are locked when the patient is not being transported.**

⚠ **WARNING: The pendant has a warning label on it stating: Place pendant in holder when not in use — keep cord clear of moving parts.**

⚠ **WARNING: The chair is equipped with a built in battery back-up system: nevertheless, the unit should remain plugged into wall receptacle during normal use. The battery back-up is recommended for transport and emergency ONLY.**

⚠ **WARNING: The back quick-drop handle is intended to be used during emergency situations ONLY.**

⚠ **WARNING: To turn electric controls on, plug into wall receptacle. To turn off, remove plug from wall receptacle. The electric powered chairs do not have a separate on / off switch.**

⚠ **WARNING: The chair has a warning label located above the control box cover stating: To reduce the risk of electrical shock do not remove the cover. Service by qualified personnel ONLY.**

⚠ **WARNING: ALWAYS disconnect the power source when troubleshooting or servicing the chair.**

⚠ **WARNING: Steam cleaning and pressure washing of chair is not recommended and can void warranty.**

⚠ **WARNING: The chair has a warning label indicating a pinch point located on both side rails (pinch point between seat section and side rail), on foot section (pinch point between fixed and extended foot sections), and on back push handles.**

⚠ **WARNING: Cables can become pinched. Keep cables away from column.**

⚠ **WARNING: Lowering chair in supine position onto an object may cause tipping and personal injury.**

⚠ **CAUTION: Stow away power cord when not in use to prevent injury or damage.**

ELECTROMAGNETIC COMPATIBILITY (EMC) INFORMATION

⚠ **WARNING: Medical Electrical Equipment needs special precautions regarding EMC and needs to be installed and put into service according to the EMC information provided in this manual.**

⚠ **WARNING: Electronic equipment may be influenced by Radio Frequency (RFI). Caution should be exercised with regard to the use of portable communications in the area around such equipment. Portable RF communications equipment (including peripherals such as antenna cables and external antennas) should be used no closer than 12 inches (30 centimeters) to any part of the Hausted equipment including specified Hausted equipment cables. Degradation of the performance of the Hausted equipment could result.**

⚠ **WARNING: If RFI causes erratic behavior, unplug the electric Hausted equipment immediately. Leave unplugged while transmission is in progress.**

⚠ **WARNING: The use of accessories, transducers, and cables other than those specified by the manufacturer may result in increased emissions or decreased immunity of the Hausted equipment. GF cables and accessories include motor cables, mains cable, pendant cables, and back up battery and cable.**

⚠ **WARNING: This equipment should not be used adjacent to or stacked with other equipment. If adjacent or stacked use with other equipment is necessary, this Hausted equipment and the other equipment should be observed to verify that they are operating normally.**

⚠ **WARNING: The EMISSIONS characteristics of this equipment make it suitable for use in industrial areas and hospitals (CISPR 11 class A). If it is used in a residential environment (for which CISPR 11 class B is usually required) this equipment might not offer adequate protection to radio frequency communication services. The user might need to take mitigation measures, such as relocating or reorienting the equipment.**

2 UNCRATING INSTRUCTIONS

IMPORTANT — REPORT ANY SHIPPING DAMAGE IMMEDIATELY

⚠ **WARNING: Inform shipper of any damages — leave carton intact. Leave equipment in the receiving area until inspection is complete.**

NOTICE — POSSIBLE EQUIPMENT DAMAGE

▲ **NOTICE: The crate contains fragile, expensive medical equipment. Uncrate and handle carefully. If after uncrating the equipment you find any damage (no matter how slight), report the damage to GF Health Products, Inc.**

WARNING — PERSONAL INJURY HAZARD

⚠ **WARNING: When cutting bands, always use tool specifically designed for that purpose. This will help avoid personal injuries possibly incurred when bands are cut and tension is released.**

ENVIRONMENTAL CONDITIONS

Operating	
Temperature	5°C to 40°C
Relative Humidity	20% to 90% @ 30°C
Atmospheric Pressure	700 to 1060 hPa

Storage and Transport	
Temperature	-10°C to 50°C
Relative Humidity	20% to 90% @ 30°C
Atmospheric Pressure	700 to 1060 hPa

IMPORTANT: Follow each step in the order shown in these instructions.

UNPACKING INSTRUCTIONS

Your Hausted equipment has been carefully packed at our manufacturing plant to ensure safe shipment to your medical facility. There are several procedures you must follow to put your new equipment in service. These procedures only take a few minutes to complete and all are required to ensure proper operation of the equipment.

1. Cut the two bands around the shipping carton.
2. Remove the top cap of the carton and remove the two box side panels.
3. Remove the equipment from the carton.
4. Check to see if all features of the equipment work properly. If all the features work, advance to step 5. If any of the features do not work properly, call GF Health Products, Inc. at 1.770.368.4700.

Info: *Plug the unit into a wall socket prior to checking any electric features. The battery will reach full charge after approximately 10 hours.*

5. Clean the equipment using mild detergent to remove any dirt accumulated during shipment, and place the equipment into service.

3 OPERATING INSTRUCTIONS

3.1 ESC2EYESTR SPECIFICATIONS

Info: *All dimensions are specified in [millimeters] and inches. Unless otherwise noted, all dimensions are ± [10 mm] .375 in. Dual dimensions are minimum (left) and maximum (right) when shown in chair position, and opposite — maximum (left) and minimum (right) when shown in Trendelenburg position (bottom).*

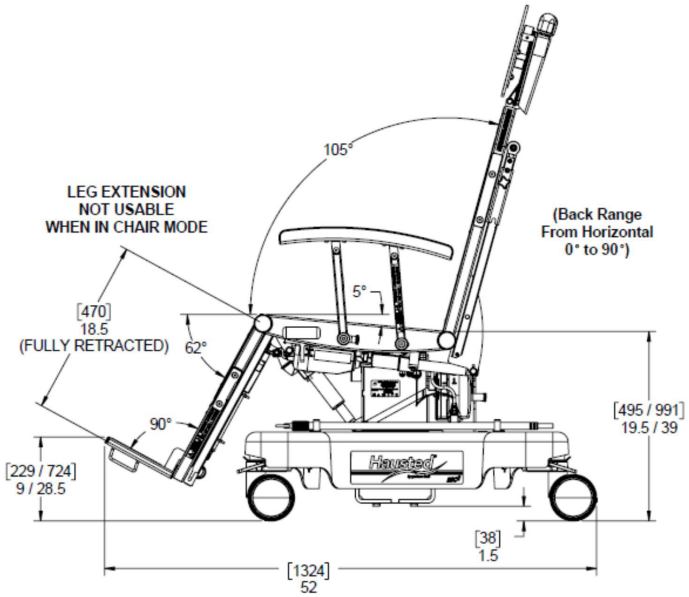

Home Position - Side View

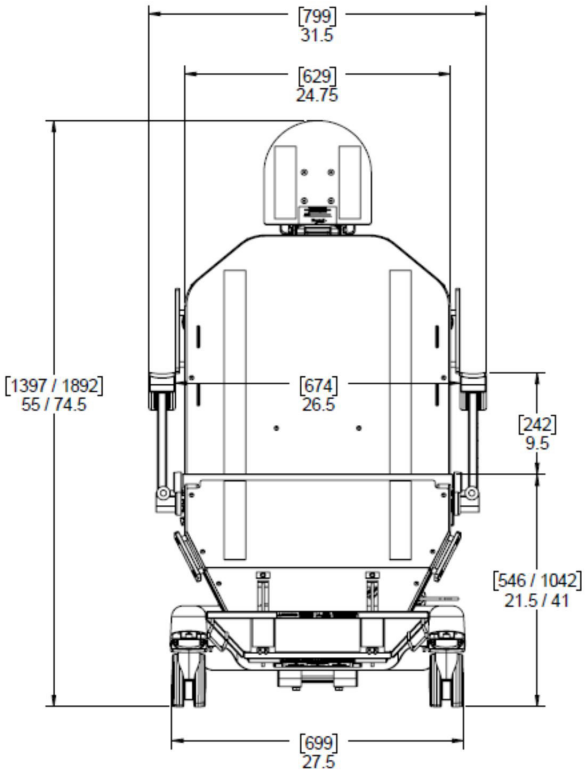

Home Position - Front View

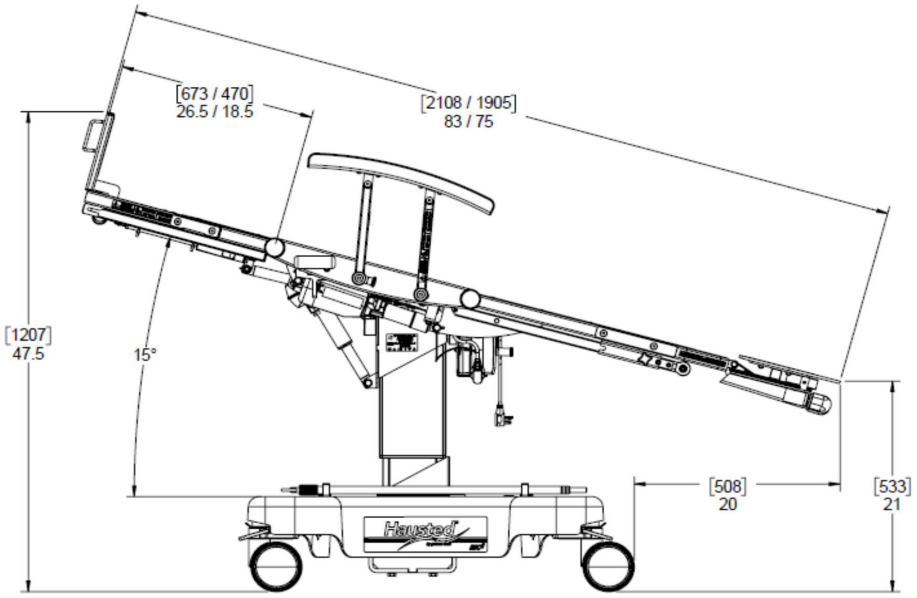

Trendelenburg Position - Side View

3.1 ESC2EYESTR SPECIFICATIONS CONTINUED

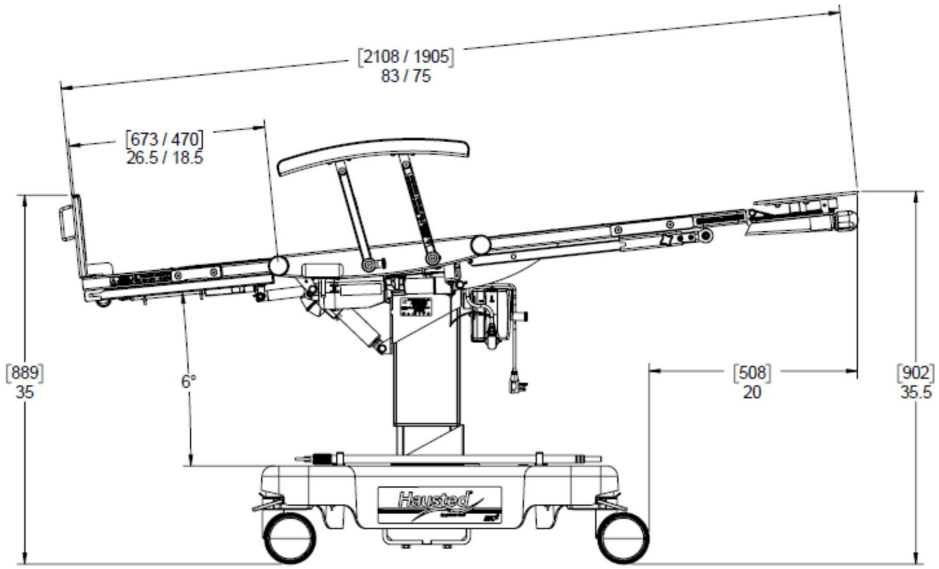

Reverse Trendelenburg Position - Side View

Electrical Specifications

Product Classification	**1**
Input Voltage	**100-240V~ 50/60 Hz**
Amperage	**Maximum 4.5A**
Duty Cycle	**10% 2 min. in 18 min.**
IP Rating	**IPX5**
Grounding Protection	**Type B**

Identification Label

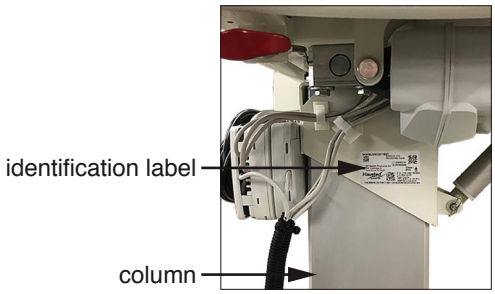

Identification label location

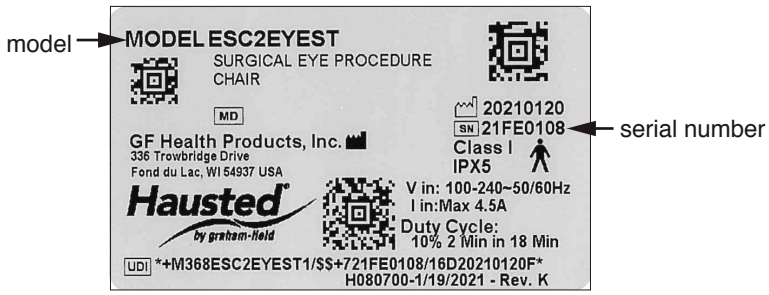

Identification label example

The chair identification label identifies the chair serial number and model, essential information when ordering replacement parts or claiming parts under warranty. The identification label, shown above, is beneath the seat on patient right, affixed to column. Have this information ready when calling our Customer Service or Technical Support staff at 1.770.368.4700; it will allow us to better assist you and quickly answer your questions and concerns.

3.2 FEATURES, WARNINGS AND PROPER OPERATION OPERATING INSTRUCTIONS

WARNINGS — CAUTIONS AND PROPER OPERATION (See Diagram on following page)

⚠ **A. WARNING: The ESC2EYESTR Surgi-Eye Chair has a maximum patient weight capacity of 600 lb (272 kg), EVENLY DISTRIBUTED.**

⚠ **WARNING: The ESC2EYESTR Surgi-Eye Chair has a maximum weight capacity, including equipment weight and patient weight, of 865 lb (393 kg).**

⚠ **B. WARNING: The chair is NOT intended to replace a stretcher or gurney.**

⚠ **C. WARNING: The chair has warning labels on both the head and foot end stating: DO NOT sit on end - as tipping may occur.**

⚠ **D. WARNING: DO NOT stand on footrest — tipping may occur.**

⚠ **E. WARNING: When not in use, DO NOT leave the chair in a recline position.**

⚠ **F. WARNING: When patient is seated in the chair, ensure the side rails are up and the patient is secured with patient safety straps.**

⚠ **G. WARNING: Patient entry, egress and transfer from the chair should ALWAYS be from the center side rail location with the side rail in the down position and the brakes locked.**

⚠ **H. WARNING: At no time should the patient be permitted to enter or exit from the ends of the chair when in partial or total recline position.**

⚠ **I. WARNING: Ensure the brakes are locked when the patient is NOT being transported.**

⚠ **J. WARNING: The pendant has a warning label on it stating: Place pendant in holder when not in use — keep cord clear of moving parts.**

⚠ **K. WARNING: All electric-powered chairs are equipped with a built in battery back-up system, but it is recommended that the unit remain plugged in wall receptacle during normal use. The battery back-up is recommended for transport and emergency ONLY.**

⚠ **L. WARNING: The back quick-drop handle is intended to be used during emergency situations ONLY.**

⚠ **M. WARNING: To turn electric controls on, plug into wall receptacle. To turn off, remove plug from wall receptacle. The electric powered chairs do not have a separate on / off switch.**

⚠ **N. WARNING: The chair has a warning label located above the control box cover stating: To reduce the risk of electrical shock DO NOT remove the cover. Service by qualified personnel ONLY.**

⚠ **O. WARNING: ALWAYS disconnect the power source whenever servicing any electric powered chair.**

⚠ **P. WARNING: The chair has a warning label indicating a pinch point located on both side rails (pinch point between seat section and side rail), on foot section (pinch point between fixed and extended foot sections), and on back push handles.**

⚠ **Q. WARNING: Cables can become pinched. Keep cables away from column.**

⚠ **R. CAUTION: Stow away power cord when not in use to prevent injury or damage.**

Features (Shown in Illustration)

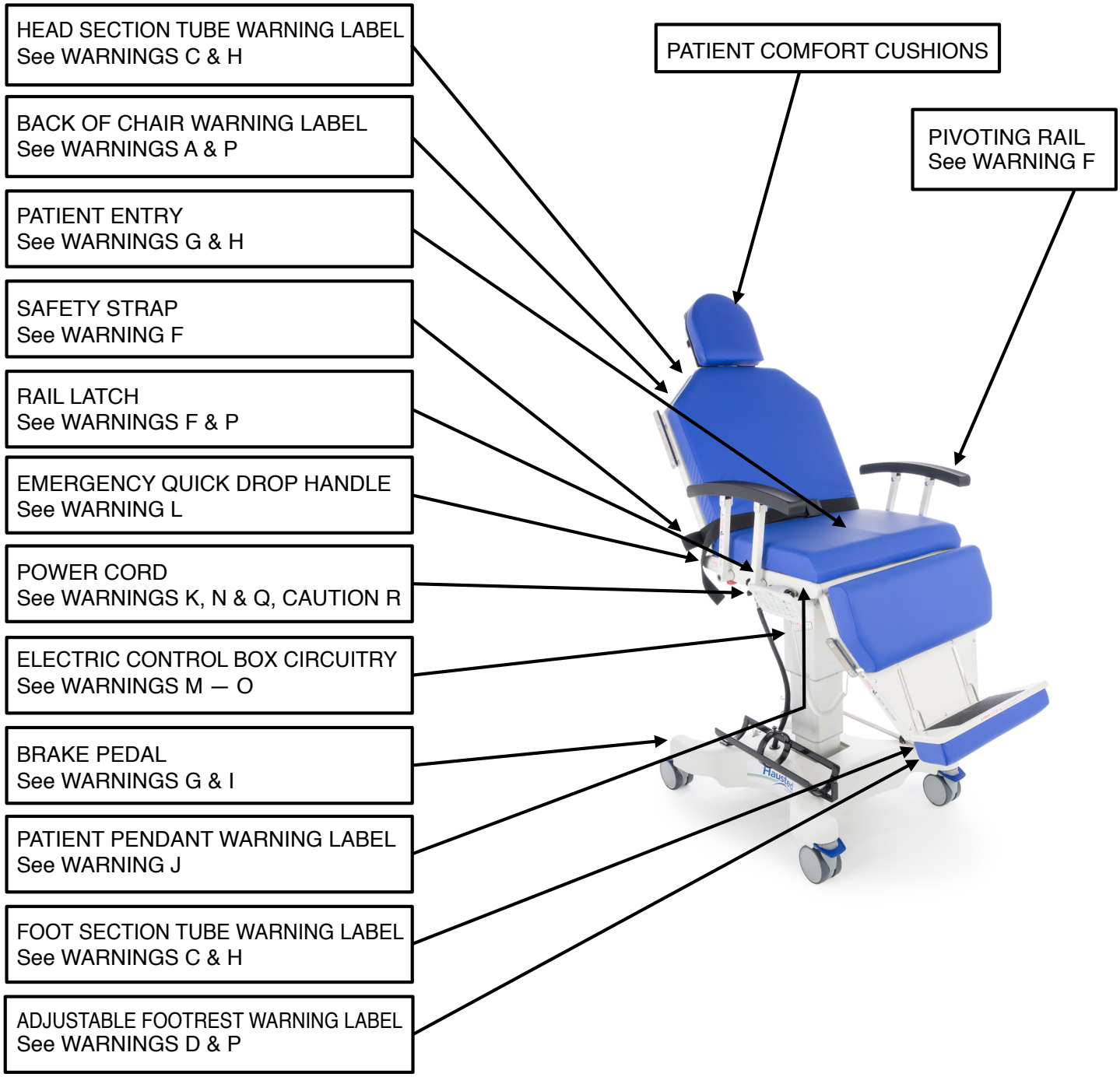

3.3 BRAKING AND STEERING OPERATION WITH SMART CASTER TECHNOLOGY

3.3.1 Applying the Brakes

To apply the four-wheel braking system with the pendant, press the pendant **Brake On/Off** button; the LED below the button then illuminates yellow (Figure 3.3-1), an audible beep will be heard, and the blue caster pedals on all four corners of the chair automatically lower to brake position (Pedal Down) (Figure 3.3-2), and all four caster wheels will then be locked from swiveling and rotating.

Info: *To prevent unintended movement, the chair is equipped with an Automatic Braking Feature and a Brake Alarm System. The brakes will engage automatically after the unit has been stationary for 3 consecutive minutes. The Brake Alarm will sound (5 quick beeps) at 5 seconds, before the brakes engage to provide warning that the casters have locked.*

Info: *An audible beep will be heard with each change of caster position (Brake / Neutral / Steer-Lock).*

To apply the four-wheel braking system manually, gently depress the blue caster pedal at any of the four corners of the chair until the pedal stops (Figure 3.3-2); the LED below the **Brake On/Off** button then illuminates yellow (Figure 3.3-1), an audible beep will be heard, and the remaining three pedals will then automatically lower to brake position (Pedal Down) (Figure 3.3-2), and all four caster wheels will then be locked from swiveling and rotating.

▲ **NOTICE: DO NOT apply excessive force to pedal when manually applying brakes.**

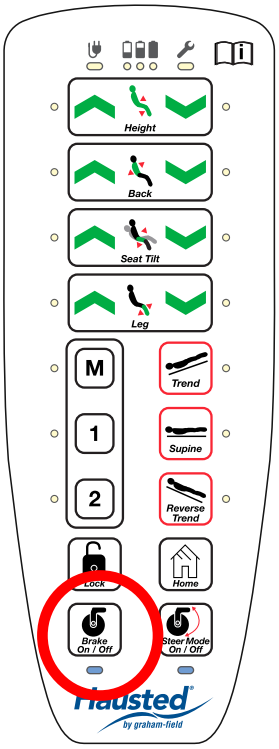

Figure 3.3-1

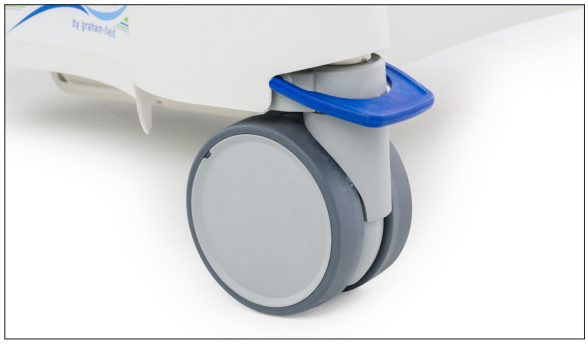

Figure 3.3-2

3.3.2 Unlocking the Brakes

To unlock the brakes with the pendant, press the pendant **Brake On/Off** button; the LED below the button then goes out (Figure 3.3-1), an audible beep will be heard, and the blue caster pedals on all four corners of the chair will automatically rise to neutral position (Pedal Horizontal) (Figure 3.3-3), and all four caster wheels will then rotate and swivel freely.

To unlock the brakes manually, gently lift the blue caster pedal at any of the four corners of the chair until the pedal stops (Figure 3.3-3); the LED below the **Brake On/Off** button then goes out (Figure 3.3-1), an audible beep will be heard, and the remaining three pedals will automatically rise to neutral, then all four caster wheels will rotate and swivel freely.

⚠ **WARNING: Ensure the brakes are locked when the patient is not being transported.**

▲ **NOTICE: DO NOT apply excessive force to pedal when manually unlocking brakes.**

Figure 3.3-3

3.3.3 Activating Steer Mode — Pendant

To activate Steer Mode with the pendant, press the pendant **Steer Mode On/Off** button. The LED below the button then illuminates yellow (Figure 3.3-4), an audible beep will be heard, and the blue caster pedals at the patient foot-end of the chair will automatically rise to Steer-Lock position (Pedal Up) (Figure 3.3-5). The patient head-end caster pedals will automatically rise to neutral position (Pedal Horizontal) (See Figure 3.3-3 on Page 13), and the chair will be ready for transport. From the patient head-end, push the chair forward – both front casters will lock into Steer-Lock position. The chair will steer along a straight path, maneuver corners, and change direction with minimal effort.

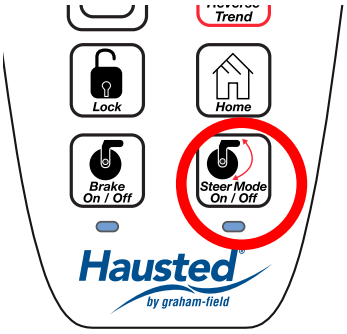

Figure 3.3-4

Info: *The casters will lock into Steer-Lock position when turned to 6 o'clock or 12 o'clock, with the chair's patient foot-end being 12 o'clock.*

Info: *Depending upon how the casters are oriented when they lock, they can lock into Steer-Lock position while trailing (6 o'clock) or Leading (12 o'clock). If the casters lock in the opposite orientations, steering may be more difficult.*

Info: *The pendant will only lock the patient foot-end casters into Steer-Lock Position, which is ideal for pushing the chair from the patient head-end.*

Figure 3.3-5

3.3.4 Activating Steer Mode – Manually

Note: *All four casters must be in neutral position (Pedal horizontal) (see Figure 3.3-3 on Page 13) before manually activating Steer Mode.*

When pushing from the head end: Make sure all four casters are in neutral position (Pedal Horizontal) (see Figure 3.3-3 on Page 13); activate foot-end Steer Mode by lifting the blue pedal upward on either head-end caster until the pedal stops (Figure 3.3-5). Both foot-end pedals will rise into Steer-Lock position (Pedal Up) (Figure 3.3-5), the head-end pedals will remain in neutral position (Pedal Horizontal) (see Figure 3.3-3 on Page 13), the LED above the pendant **Steer Mode On/Off** button will illuminate green (Figure 3.3-4), and an audible beep will be heard. From the patient head-end, push the chair forward – both front casters will lock into Steer-Lock position and the chair will be ready for transport.

When pushing from the foot end: Make sure all four casters are in neutral position (Pedal Horizontal) (see Figure 3.3-3 on Page 13); activate head-end Steer Mode by lifting the blue pedal upward on either foot-end caster until the pedal stops (Figure 3.3-5). Both head-end pedals will rise into Steer-Lock position (Pedal Up) (Figure 3.3-5), the foot-end pedals will remain in neutral (Pedal Horizontal) (see Figure 3.3-3 on Page 13), the LED above the pendant **Steer Mode On/Off** button will illuminate green (Figure 3.3-4), and an audible beep will be heard. From the patient foot-end, push the chair forward – both front casters will lock into Steer-Lock position and the chair will be ready for transport.

Info: *It is not possible to lock the head-end casters into Steer-Lock position with the pendant. This can only be done with the foot-end manual activation.*

3.3.5 Deactivating Steer Mode — Pendant

To deactivate Steer Mode with the pendant, press the pendant **Steer Mode On/Off** button. The LED above the button will go out, and an audible beep will be heard, and the blue casters pedals in Steer-Lock position will automatically lower to neutral (Pedal Horizontal)
(see Figure 3.3-3 on Page 13). All four casters will now rotate and swivel freely.

Info: *All four casters must be parallel to each other in the 6 o'clock or 12 o'clock position to be able to properly go into unlock / neutral position. Failure to place casters in this orientation may cause the Steer Mode On/Off button to not deactivate Steer Mode.*

3.3.6 Deactivating Steer Mode – Manually

Depress the blue caster pedal down to the neutral position (Pedal Horizontal) (see Figure 3.3-3 on Page 13) on any caster locked in Steer-Lock position. The LED above the **Steer Mode On/Off** button will go out, an audible beep will be heard, and the other caster in Steer-Lock position will automatically lower to neutral position (Pedal Horizontal) (see Figure 3.3-3 on Page 13).
All four casters will now rotate and swivel freely. Depressing the blue pedal down past neutral until it stops will apply all four casters brakes (see Figure 3.3-2 on Page 13), locking all four casters into brake position (Pedal Down).

Info: *After thirty seconds of no movement, Steer Mode automatically deactivates and all four caster wheels lock into brake position.*

⚠ **WARNING: To prevent unintended movement, activate or deactivate Steer Mode only while the chair is stopped.**

Caster Pedal Positions

The table below shows the blue caster pedal in all three positions.

CASTER PEDAL POSITIONS		
	Pedal Up	**Steer-Lock Position**
	Pedal Horizontal	**Neutral Position (Swivel)**
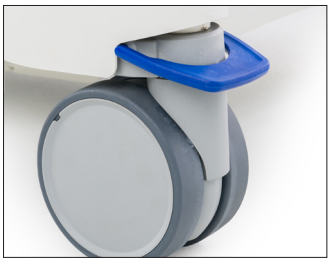	**Pedal Down**	**Brake Position (Locked)**

3.4 ELECTRIC CONTROL LOCATIONS

3.4.1 Pendant Control Storage Location

The pendant is located on the pendant holder on either side of the chair (Figure 3.4-1).

▲ **NOTICE: Place pendant on holder when not in use. Keep cord clear of moving parts.**

Figure 3.4-1

3.4.2 Plug Location

This chair is equipped with a battery back-up for transport but the unit should be plugged into a wall receptacle when not in transport. The plug is located on the back of the control box (Figure 3.4-2). DO NOT position the unit so that it is difficult to disconnect the plug.

⚠ **WARNING: ESC2EYESTR Surgi-Eye Chair is equipped with a built in battery back-up system: nevertheless, the unit should remain plugged into wall receptacle during normal use. The battery back-up is recommended for transport and emergency ONLY.**

Figure 3.4-2

3.4.3 Low Battery Alarm / Battery Level Indicator

This chair is equipped with an audible and visual low battery alarm and battery level indicator. When the system requires charging, a continuous beep will sound during motor operation, the pendant LED's (Figure 3.4-3) above the **Height Up / Down** buttons will illuminate based on the battery level (Figure 3.4-4).

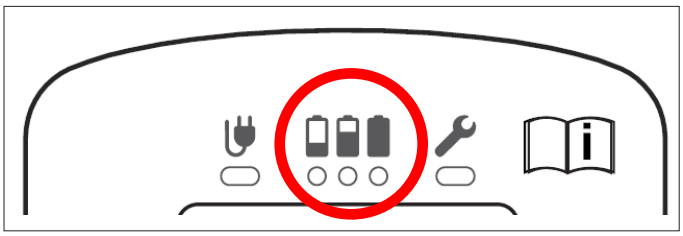

Figure 3.4-3

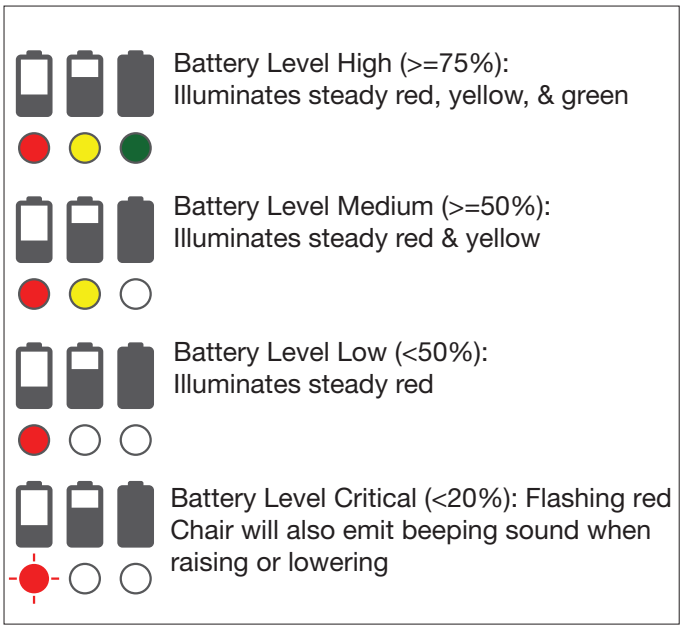

Figure 3.4-4

3.4.4 Foot Control

Large circle indicates optional foot control storage location (Figure 3.4-5). Small circle indicates foot control plug-in location (Figure 3.4.5), which can also be used as an alternate pendant plug-in location.

Figure 3.4-5

3.4.5 Main Power Indicator

The chair is equipped with a visual mains power indicator. When the unit is plugged into a wall receptacle, the **LED** (Figure 3.4-6) above the **Height Up** button will illuminate steady "**Bright**" white.

Info: ***When the unit is unplugged from a wall receptacle, the LED will illuminate steady white (back-light).***

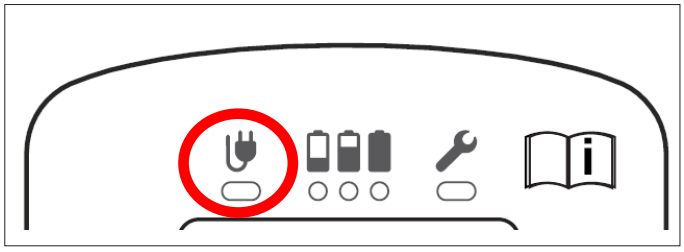

Figure 3.4-6

3.4.6 Service Indicator

The chair is equipped with an visual service indicator. When the unit requires service and/or an error occurs, the **LED** (Figure 3.4-7) above the **Height Down** button will illuminate steady "**Bright**" white.

Info: ***When the unit is operating normally, the LED will illuminate steady white (back-light).***

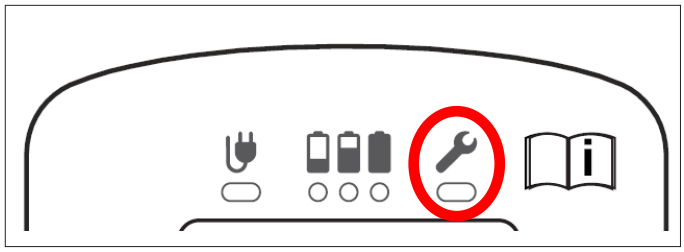

Figure 3.4-7

3.5 HEIGHT AND PATIENT SURFACE ADJUSTMENT

Figure 3.5

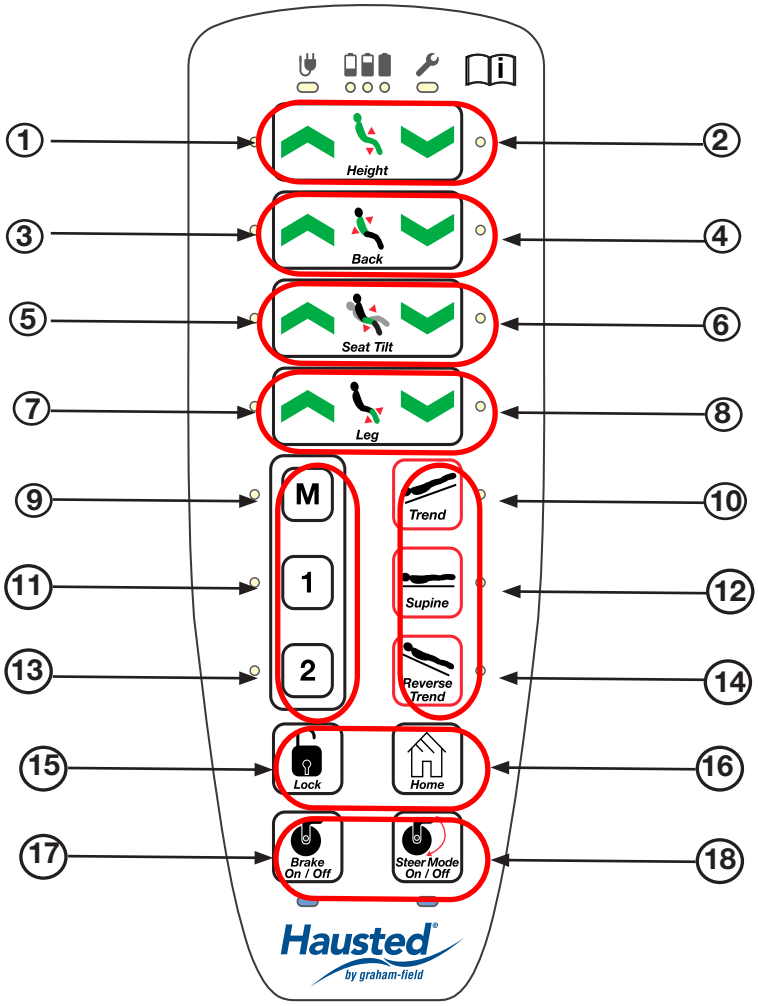

The Hand Pendant is equipped with a back-light allowing the button LED's to be visible (steady white) while unpressed. While each button is pressed, the LED will illuminate steady yellow, when released the LED will illuminate steady white. When the control box and hand pendant go into power save mode "sleep", the back-light will turn off, and the lights will NOT be visible.

3.5.1 Height (HI / LO) (buttons 1 & 2)

1	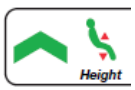	**HEIGHT UP**	**Press and hold Height Up button (1) until desired height is achieved. LED illuminates steady yellow while pressed, turns steady white when released.**
2	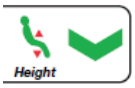	**HEIGHT DOWN**	**Press and hold Height Down button (2) until desired height is achieved. LED illuminates steady yellow while pressed, turns steady white when released.**

3.5.2 BACK SECTION UP / DOWN (buttons 3 & 4)

3	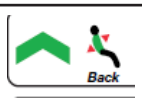	**BACK UP**	**Press and hold BACK UP button (3) until desired position is achieved. LED illuminates steady yellow while pressed, turns steady white when released.**
4		**BACK DOWN**	**Press and hold BACK DOWN button (4) until desired position is achieved. LED illuminates steady yellow while pressed, turns steady white when released.**

3.5.3 SEAT TILT UP / DOWN (buttons 5 & 6)

5		SEAT TILT UP	Press and hold SEAT TILT UP button (5) until desired position is achieved. LED illuminates steady yellow while pressed, goes out when released.
6	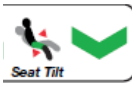	SEAT TILT DOWN	Press and hold SEAT TILT DOWN button (6) until desired position is achieved. LED illuminates steady yellow while pressed, goes out when released.

3.5.4 LEG UP / DOWN (buttons 7 & 8)

7		LEG UP	Press and hold LEG UP button (7) until desired position is achieved. LED illuminates steady yellow while pressed, goes out when released.
8		LEG DOWN	Press and hold LEG DOWN button (8) until desired position is achieved. LED illuminates steady yellow while pressed, goes out when released.

3.5.5 TRENDELENBURG AND SUPINE Positions (buttons 10, 12, & 14)

10		TRENDELENBURG	Press and hold TRENDELENBURG button (10) until desired position is achieved. Chair automatically lowers back section, raises leg section, and tilts seat section backwards simultaneously; chair also automatically adjusts height. LED illuminates steady yellow while pressed, turns steady white when released.
12		SUPINE	Press and hold SUPINE button (12) until desired position is achieved. Chair automatically levels back section, leg section, and seat section simultaneously; chair also automatically adjusts height. LED illuminates steady yellow while pressed, turns steady white when released.
14		REVERSE/ TRENDELENBURG	Press and hold REVERSE TRENDELENBURG button (14) until desired position is achieved. Chair automatically lowers back section, raises leg section, and tilts seat section forward simultaneously; chair also automatically adjusts height. LED illuminates steady yellow while pressed, turns steady white when released.

3.5.6 Memory and Preset Functions (Buttons 9, 11, & 13)

9	M	MEMORY	Position chair to desired position. Enter MEMORY MODE by pressing and holding MEMORY button (9) for three seconds until LED begins to flash yellow. Once MEMORY LED flashes, simultaneously press and hold MEMORY button (9) and desired PRESET button (11 or 13) until beeping stops (MEMORY LED will stop flashing and turn steady white; and PRESET LED will illuminate steady yellow). Once MEMORY button and PRESET button are released, the position saves, LED's turn steady white, and MEMORY MODE exits. After entering MEMORY MODE, PRESET buttons that illuminate steady yellow are already programmed, but can be overwritten; PRESET buttons that don't illuminate are not yet programmed.
11	1	PRESET 1	Press and hold PRESET 1 button until saved pre-programmed position is achieved. LED illuminates steady yellow when pressed, turns steady white when released.
13	2	PRESET 2	Press and hold PRESET 2 button until saved pre-programmed position is achieved. LED illuminates steady yellow while pressed, turns steady white when released.

3.5.7 LOCK / UNLOCK (button 15)

15	Lock	LOCK	Press and hold LOCK button (15) for three seconds to lock all functions. All LED's will flash yellow five times, then illuminate steady yellow and followed by three audible beeps indicating that they are now locked.
		UNLOCK	Press and hold LOCK and HOME buttons (15 & 16) at the same time to unlock all functions. All LED's will flash yellow with three audible beeps indicating unlocked. All LED's will continue to flash yellow until BOTH buttons are released. Once released the LED's will turn steady white.
		UNLOCK INDIVIDUAL FUNCTION (PATIENT MODE)	Press and hold LOCK button (15) and press each UP button (1, 3, 5, & 7) to unlock each function individually. As each button is released, its LED will turn steady white, indicating that function is unlocked.

3.5.8 HOME (button 16)

16	Home	HOME	Press and hold HOME button (16) until desired position is achieved. Chair automatically raises back section, lowers leg section, and tilts seat section simultaneously; chair also automatically adjusts height. No LED. *Note: Leg extension must be fully retracted.*

3.5.9 BRAKE & STEER MODE (buttons 17 & 18)

17	Brake On / Off	BRAKE	Press BRAKE button (17) to toggle on / off. When brakes are locked (on), LED illuminates steady white; when brakes are unlocked (off), LED goes out. To prevent unintended movement, brakes lock automatically after chair is stationary for 3 consecutive minutes. Before brakes engage, a Brake Alarm will sound (5 quick beeps) 5 seconds before.
18	Steer Mode On / Off	STEER MODE	Press STEER MODE button (18) to toggle on / off. When steer mode is activated, LED illuminates steady white; when steer mode is off, LED goes out. *Note: Steer mode is not operable when brake is activated.* *Note: Steer Mode button only locks the patient foot-end casters into Steer-Lock Position.*

3.5 HEIGHT AND PATIENT SURFACE ADJUSTMENT

3.5.10 Emergency Drop Back

This chair is equipped with a manual override function for the back section of the chair. This option should only be used in an emergency situation. To activate the emergency drop back, support the back section and pull outward on the red activating handle located on the patient right side under the seat to the rear (Figure 3.5-6).

Figure 3.5-6

Info: *When activating the emergency drop, depending on the back angle, you may need to push the back in order to initiate movement.*

Info: *When activating the emergency drop back, depending on how far the red activating handle is pulled outward, it is possible to control the descend speed of the back section.*

3.6 ADJUSTABLE FOOTREST

3.6.1 Repositioning the Footrest

The footrest has three positions: retracted, lower, and upper. With the pan in the retracted position, pull out anywhere on top of the pan (Figure 3.6-1). The footrest will drop into the lower position (Figure 3.6-2).

To move the footrest into the upper position, grasp both sides of the pan and tilt the pan up while lifting (Figure 3.6-1). Once the pan is fully up, tilt the pan out until it locks into the upper position (Figure 3.6-3).

To return the footrest to the retracted position, tilt the pan up while letting it slide down into the lower position. Continue tilting the footrest until it is in the retracted position (Figure 3.6-1).

⚠ **WARNING: TIPPING HAZARD — DO NOT stand on footrest — tipping may occur.**

Figure 3.6-1

Figure 3.6-2

Figure 3.6-3

3.7 ADJUSTABLE LEG EXTENSION

3.7.1 Repositioning the Motorized Leg Extension

The motorized leg extension can be adjusted to make the footrest up to 8.0" (20 cm) longer when fully extended (Figure 3.7-1).

Figure 3.7-1

Extending the Motorized Leg Extension

Info: *The motorized leg extension can only be extended when the leg is in the horizontal position.*

1. Press and hold the right side of the switch (+) labeled EXTEND (Figures 3.7-2 and 3.7-3).
2. Release the switch to lock in place when the leg extension is in the desired position.

Figure 3.7-2

Retracting the Motorized Leg Extension

Press and hold the left side of the switch (-) labeled RETRACT (Figures 3.7-3 and 3-.7-4).

⚠ **WARNING: Keep hands clear of pinch points when retracting the footrest.**

Safety Limits

Info: *To prevent the leg section from touching the ground when lowering the chair or leg section, safety limits have been built into the chair.*

Figure 3.7-3

Operation While Leg Extension Is Extended (Any Distance)

When the Leg Extension is not completely retracted, the leg section can only be positioned between 0˚ and 33˚ from horizontal, providing knee flex capability, and the chair can travel its full height range.

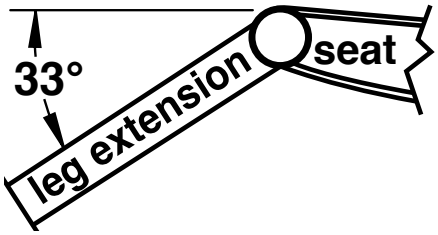

Figure 3.7-4

Operation While Leg Extension Is Retracted

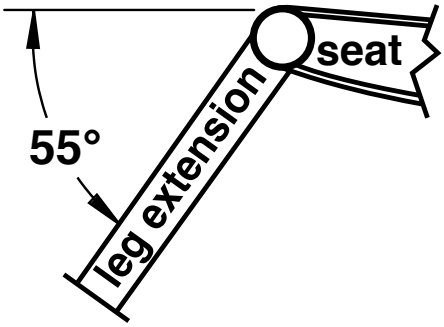

A. When the leg extension is fully retracted and the chair height is below 22" (55.9 cm) (top of seat to floor), the leg section can only be positioned between 0˚ and 55˚ from horizontal.
B. When the leg extension is fully retracted and the chair height is above 22" (55.9 cm) (top of seat to floor), the leg section can travel its full range of motion from horizontal.
C. When the leg extension is fully retracted and the leg section is more than 55˚ from horizontal, the chair can not travel below 22" (55.9 cm) (top of seat to floor).
D. When the leg extension is fully retracted, and the chair height is below 22" (55.9 cm) (top of seat to floor), and the leg section is more than 55˚ from horizontal, the seat tilt cannot be positioned below 5˚ from horizontal.
E. When the leg extension is fully retracted, and the chair height is below 22" (55.9 cm) (top of seat to floor), and the leg section is less than 55˚ from horizontal, the seat tilt can be positioned below 5˚ from horizontal.

3.8 PIVOTING RAILS

3.8.1 Repositioning the Rail

The chair rail has two positions, raised and lowered. Both positions lock the rail into place.

Lowering the Pivoting Rail

Grasp the top of the rail, push or pull outward on the black release plunger (Figure 3.8-1), and pull the top of the rail toward the head end of the chair (Figure 3.8-4); rotate the rail all the way down until the release plunger locks back into place (Figure 3.8-3).

Raising the Pivoting Rail

Grasp the top of the rail, pull outward on the black release plunger (Figure 3.8-3), and lift the rail all the way up until the release plunger locks back into place (Figure 3.8-2).

⚠ **WARNING: When patient is seated in the chair, ensure the pivoting rails are up and the patient is secured with safety straps.**

⚠ **WARNING: The chair has a warning label located on both pivoting rails indicating a pinch point between seat section and side rail.**

Figure 3.8-1

Figure 3.8-2

Figure 3.8-3

Figure 3.8-4

3.9 HEADREST

3.9.1 Adjusting the Headrest

Grasp the right ball style knob (Figure 3.9-1), and rotate it counterclockwise to articulate the head section upward (Figure 3.9-2); rotate the knob clockwise to articulate the head section downward (Figure 3.9-4).

Once the upward articulation has been set, grasp the left ball style knob (Figure 3.9-4), and rotate the knob counterclockwise to adjust the height of the headrest (Figure 3.9-5).

Info: *After understanding which knob creates which action, quick and smooth infinite adjustment can be achieved by rotating the knobs simultaneously (Figure 3.9-6).*

Figure 3.9-1

Figure 3.9-2

Figure 3.9-3

Figure 3.9-4

Figure 3.9-5

3.10 PUSH HANDLES

3.10.1 Operating the Push Handles

Push Handles are stowed away when not in use (Figure 3.10-1).

Push Handles may be operated with the back in either raised or lowered position.

Rotating and Positioning the Hand Grips

The **Hand Grips** rotate 360˚ in 10˚ increments. To rotate a **Hand Grip** (Figure 3.10-2), hold it firmly, press the black button (Figure 3.10-3), rotate the **Hand Grip** to the desired position, and release the button.

Operating the Push Handles with the Back in Raised Position

Rotate the Push Handles to the desired position with the back in raised position (Figure 3-10.5).

Operating the Push Handles with the Back in Lowered Position

Pull out and hold the **Push Handle Release Plungers** (Figure 3.10-4) and extend the **Push Handles** to the end position. Rotate the Push Handles to the desired position with the back in lowered position (Figure 3-10.6).

⚠ **WARNING: To prevent unintended interference, ensure Push Handles are stowed away as shown in Figure 3.10-1 when not in use.**

Figure 3.10-1

Figure 3.10-2

Figure 3.10-3

Figure 3.10-4

Figure 3.10-5

Figure 3.10-6

3.11 COMMON OPTIONAL ACCESSORIES

3.11.1 Mounting the Wrist Rest

Insert the **Wrist Rest** into one of the appropriate three square sockets under the headrest (Figure 3.11-1). Rotate the T-knob on the back of the **Wrist Rest** (Figure 3.11-2) clockwise to lock it into place.

▲ **NOTICE: Ensure the Wrist Rest is secure before applying any pressure.**

Figure 3.11-1

Figure 3.11-2

3.11.2 Adjusting the Wrist Rest

Once the **Wrist Rest** has been properly installed per 3.11-1, the height can be adjusted as needed. Support the **Wrist Rest** and loosen the black knob on the side of the support post (Figure 3.11-3).

Position the **Wrist Rest** to the desired height and rotation. Tighten the black knob located on the side of the support post (Figure 3.11-3).

▲ **NOTICE: Ensure the Wrist Rest is secure before applying any pressure.**

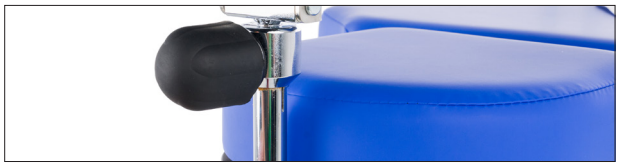

Figure 3.11-3

3.11.3 Installing IV Rod

Remove the **IV Rod** from the clips located on the base (Figure 3.11-4). Insert **IV Rod** into preferred IV well — there are two sockets on both sides of chair (Figure 3.11-5). Return **IV Rod** to storage clips when not in use (Figure 3.11-4).

Figure 3.11-4

3.11.4 Using Safety Straps

Locate both ends of the **Safety Strap**, on each side of the chair. One half of the strap has a clamping buckle and the other half is a bare strap with a square loop (strap is folded back on itself and sewn) on the end.

1. Pull on the clamp to open the clamping buckle.
2. Feed the bare strap through the buckle slot where the clamp pivots away from the base.
3. Pull on the bare strap until the patient is secure.
4. Close the clamp to lock the strap in place (Figure 3.11-6).

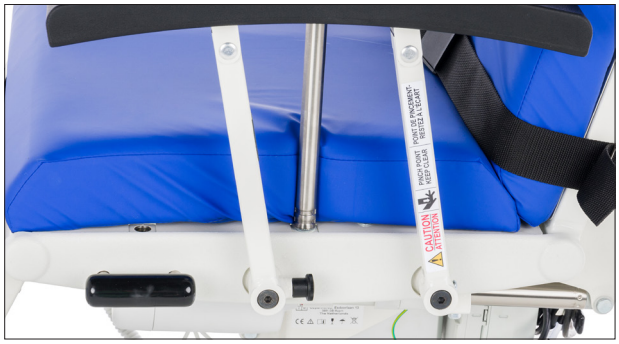

Figure 3.11-5

Figure 3.11-6

4 TROUBLESHOOTING GUIDE

⚠ **DANGER: SHOCK HAZARD — To reduce the risk of electric shock, unit is to be serviced by qualified service personnel ONLY.**

⚠ **DANGER: SHOCK HAZARD — ALWAYS disconnect the power source whenever troubleshooting or servicing any electric powered chair.**

The following list of problems and their solutions will assist you in determining what may be causing your chair not to function as designed.

If	Then
One motor or HEIGHT does not move, but all others are working correctly.	Step 1: Press the non-working function's pendant button and observe the control box LED: if the pendant and cable are OK, pressing the button will illuminate the control box LED amber. If not, check cable for cuts or breaks; if OK, replace the pendant.
	Step 2: If control box LED illuminates, plug the faulty component's connector into the HEIGHT, SEAT TILT, or LEG actuator. If the component does not run, replace the component. NOTE: Do not plug into BACK actuator. If the component runs, plug a functioning component into the non-functioning control box socket (not the BACK). If this component does not run, replace the control box.
	Note for the BACK actuator: If the control box LED illuminates when pressing the BACK button, replace the BACK actuator. If not, inspect the cable for cuts or breaks; if OK, replace the pendant.
	See next page for location of actuator and battery plug positions.
Nothing moves.	Step 1: Plug unit into a mains supply wall receptacle and observe the control box LED: If the control box LED is off, replace the control box. If the control box LED illuminates, check the pendant cable connection at the control box. Replace pendant if necessary.
The unit runs when plugged into the wall receptacle, but does not run on backup battery.	Step 1: Plug unit into wall receptacle overnight. If the battery does not hold a charge, replace the battery (see section 4.2).
Chair will not lower to 20" height.	See Safety Limits section 3.7.1.
Pressing any pendant patient positioning button causes all LED's to flash. Nothing works.	One of the actuators has lost position, causing a "fatal error". Simultaneously press and hold the pendant MEMORY 3 and LEG UP buttons until the beeping stops. Find HOME position by pressing and holding the left side of the motorized leg extension RETRACT switch (-) to retract the leg extension, then using the pendant to completely raise the HEIGHT, completely lower the BACK, completely tilt the SEAT down, and completely lower the LEG. This should cause everything to function normally thereafter.
Only one patient surface positioning button causes all LED's to flash.	That function's actuator has become unplugged. Plug in at control box and reset as above.
None of the caster functions activate when pressing the BRAKE or STEER MODE buttons.	Press the pendant BRAKE button to lock or unlock brakes. Control box LED does not illuminate amber. Inspect pendant cable, replace pendant.
Casters do not return to NEUTRAL position when pressing the STEER MODE button.	During certain procedural moves, all four casters may be positioned facing under the base. Move chair approximately one inch in opposite direction of last move to remove pressure from casters.
BRAKE and STEER MODE LEDs flash. One of the brakes does not activate.	Ensure the affected brake's cable connection is secure. If still no activation, replace the caster. Note: the caster brake can still be engaged / disengaged manually; see section 3.3.6.
Adjustable leg extension does not operate.	The leg extension can only be extended when the leg is in the HORIZONTAL position (see section 3.7.1). Press leg extension EXTEND or RETRACT button. Control box LED should illuminate amber. If so, replace the actuator. If not, replace the switch.
HOME button beeps when pressed, but nothing moves.	The adjustable leg extension is not fully retracted. Press the RETRACT button until the leg extension reaches the fully retracted position.

GF Health Products, Inc. may be contacted at 1.770.368.4700 for additional information required to service or repair the equipment.

4.1 CONTROL BOX

Control Box Features

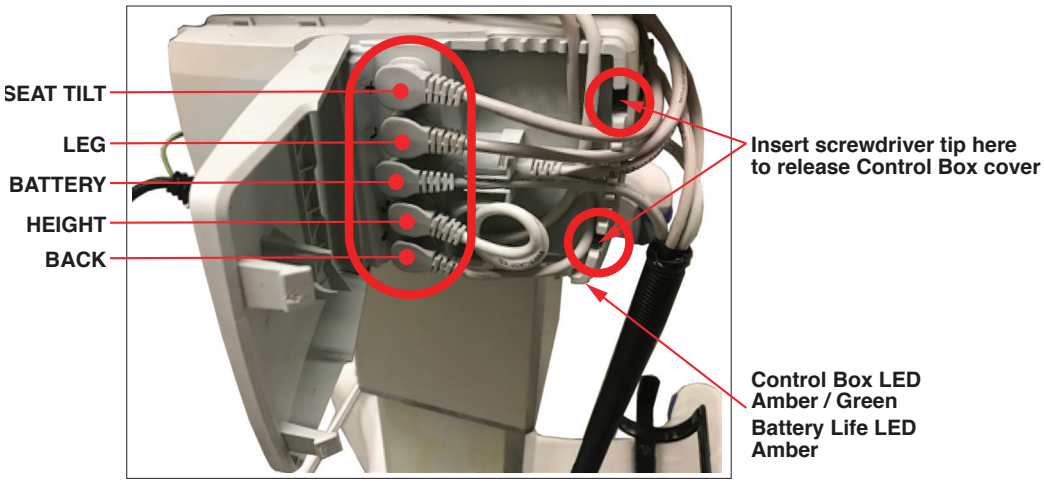

Figure 4.2-1

Figure 4.2-2

4.2 BATTERY REPLACEMENT

⚠ **DANGER: SHOCK HAZARD — To reduce the risk of electric shock, unit is to be serviced by qualified service personnel only.**

⚠ **DANGER: SHOCK HAZARD — ALWAYS disconnect the power source whenever troubleshooting or servicing this chair.**

Info: *The ESC2EYESTR utilizes a unique battery specific to this unit. To order, contact Graham-Field Customer Service at 1.770.368.4700, or your authorized distributor if purchased outside the U.S.*

1. Remove power cord storage bracket from control box by pulling up the tab on left (when standing at back of chair) and sliding entire bracket left so that tabs in control box align with cutouts in storage bracket. Bracket can be pulled up once aligned properly (Figure 4.2-1).
2. Unwind cord, providing enough slack to place entire bracket on floor and out of the way (Figure 4.2-2).
3. Remove the control box from the battery by pressing the tab on the left side toward the front of the chair (Figure 4.2-3), then slide the control box right so that the tabs in the control box align with cutouts in storage bracket. Swing the left end of the control box away from the battery to gain access and carefully allow the cords to support it.
4. Release the battery by pressing the tab on the battery mounting bracket toward the front of the chair (Figure 4.2-4) and then slide the battery to the right so battery tabs align with bracket cutouts. The battery can be pulled up and removed once properly aligned (Figure 4.2-5).
5. Release the battery cord using a flat head screwdriver to depress the cable lock tab until it pops free (Figure 4.2-6).
6. Remove the cable from the battery and replace it with a new battery (Figure 4.2-7).
7. To re-install the battery, repeat previous steps in reverse order.

GF Health Products, Inc. may be contacted at 1.770.368.4700 for additional information required to service or repair the equipment.

Figure 4.2-3

Figure 4.2-4

Figure 4.2-5

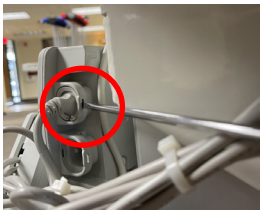

Figure 4.2-6

Figure 4.2-7

5 PREVENTIVE MAINTENANCE FOR THE USER

Component	Cleaning Procedure	Schedule	Cleaning Agent *	Special Notes
Pads / Mattresses	Wipe with damp cloth to remove any foreign material	After each use	Routine hospital grade disinfectants, soap and water	Use only medium strength cleaners Do not steam clean or pressure wash
Chair	Wipe with damp cloth to remove any foreign material		Routine hospital grade disinfectants, soap and water	Lubricate pivot points after cleaning
Electrical components	Wipe external surfaces ONLY with damp cloth to remove any foreign material		Routine hospital grade disinfectants, soap and water	Use only medium strength cleaners
Mechanical chair components	Wipe with damp cloth to remove any foreign material		Routine hospital grade disinfectants, soap and water	
Mechanical accessories	Wipe with damp cloth to remove any foreign material		Routine hospital grade disinfectants, soap and water	

Procedure	Schedule	Material
Lubricate all actuator mounting pins	Every 6 months	Lithium-based grease
⚠ NEVER LUBRICATE MOTOR OR COLUMN ⚠		
Inspect all fasteners to ensure proper fit, position and tightness, including nuts, bolts, etc.	Every 3 months	Proper size wrench and screwdriver
Inspect all surfaces and remove any sharp or burred areas; apply touch-up paint where required		Metal file, proper color paint (specify color when ordering)

* Disinfecting and Cleaning Upholstery - ALWAYS follow manufacturer's recommended dilution	
Disinfectants for vinyl products	Phenolic disinfectants are the best choice for vinyl
	Properly diluted quaternaries are also acceptable for vinyl
	Quaternary / Isopropyl disinfectants ARE NOT recommended for vinyl
Disinfectants for urethane products (Standard Upholstery)	Quaternary disinfectants are recommended for urethane
	Quaternary / Isopropyl disinfectants are recommended for urethane
	Phenolics SHOULD BE AVOIDED on urethane
Disinfectants for all products	All fabrics may be cleaned with a 1:10 dilution of household bleaches containing 5.25% sodium hypochlorite as recommended by the Centers for Disease Control in Atlanta, Georgia; there is no harmful effect on the fabric
	Disinfectants applied at full concentration or in highly concentrated solutions will decrease the useful life of fabric
	Iodophor-type disinfectants used on fabric may result in staining
Soils or Stains	Use neutral soapsuds and lukewarm water; DO NOT use harsh cleansers, solvents or detergents
Hard-To-Clean Spots	Use standard household / vinyl cleansers and a soft bristle brush on troublesome spots or stains; presoak heavy, dried-on soil
Laundering	Laundering Vinyl-laminated, Polyurethane-coated, or Rubber-coated fabric IS NOT recommended; laundering may substantially decrease the useful life of the fabric

▲ **NOTICE — POSSIBLE EQUIPMENT DAMAGE HAZARD: Steam cleaning and pressure washing of chair is not recommended and can void warranty.**

Info: For more detailed information, contact GF Health Products, Inc. at 1.770.368.4700.

Info: GF Health Products, Inc. offers customized Preventative Maintenance Service Programs for Hausted products; contact your GF sales representative for further information.

6 OPTIONAL ACCESSORIES

⚠ **WARNING: Use only accessories approved by GF Health Products, Inc. with this device. The use of accessories, transducers, and cables other than those specified by the manufacturer may result in increased emissions or decreased immunity of Hausted equipment.**

Info: *To order accessories, or for more detailed information on accessories, please contact GF Health Products, Inc. at 1.770.368.4700.*

OPTIONAL ACCESSORIES		
COMPONENT	**ITEM NO.**	**DESCRIPTION**
ACCESSORY RAILS	HSA080024	SURGICAL ACCESSORY RAIL, LEG - UNIVERSAL
	HSA080025	SURGICAL ACCESSORY RAIL, HEAD - ESC2EYESTR
ARMBOARDS	H065990	SEATED ARMBOARD ASSEMBLY (NO PAD)
	H06599000-XXX	SEATED ARMBOARD ASSEMBLY WITH PAD
	HSA041300	ARMBOARD W/ 2” (5 CM) PAD AND BUILT IN CLAMP
HANDBOARDS	HSA080029-XXX	ORTHOPEDIC HAND SURGERY BOARD
FOOT CONTROL	HSA080014	ELECTRIC FOOT CONTROL, HI/LO
HAND CONTROL	HSA080037	DUAL-HAND PENDANT KIT - CHAIRS
HEEL-STIRRUPS	HAPC02600	HEEL-STIRRUPS PAIR WITH MOUNTING ADAPTERS
CONTOURED HEADRESTS	H0103ESC2-XXX	CONTOURED HEADRESTS (SET OF 3)
	H080988-XXX	INDIVIDUAL - SMALL
	H080989-XXX	INDIVIDUAL - MEDIUM
	H080990-XXX	INDIVIDUAL - LARGE
IV POLE	H000018	TELESCOPING IV POLE 27” - 54” (68 CM - 137 CM)
	H000E1700	IV POLE 42” (107 CM) FIXED HEIGHT, REMOVABLE X
	HSA080018	IV POLE/PENDANT HOLDER
	H080770	MONITOR IV POLE
OXYGEN TANK HOLDER	HSA080009	O2 TANK HOLDER
OXYFLEX II OXYGEN DELIVERY SYSTEM	HSA080003	OXYFLEX II OXYGEN DELIVERY SYSTEM
	HSA008000	DIFFUSION TRAYS, DISPOSABLE (25/CASE)
PUSH HANDLES	HSA080020	FOOT END PUSH HANDLES, PAIR
	HSA080027	FOOT END PUSH HANDLE PAT. LEFT
	HSA080028	FOOT END PUSH HANDLE PAT. RIGHT
SAFETY STRAP	HSA080015	PATIENT SAFETY STRAP W/BUCKLE AND CLIP, NON-HOOK & LOOP
SIDE TABLES	HSA080019	FOLDING SIDE TABLE (EACH)
SUPPORT RAILS	HSA080011-XXX	SHOULDER RAIL/EXT., PATIENT LEFT
	HSA080012-XXX	SHOULDER RAIL/EXT., PATIENT RIGHT
	HSA080013-XXX	SHOULDER RAIL/EXT., PAIR
WRIST REST	HSA078500	DUAL LATERAL WRIST REST ASSEMBLY
	HSA078600	FULL “U” WRIST REST ASSEMBLY
	HSP100400	FULL “U” WRIST REST (TALL)

7 GF HEALTH PRODUCTS, INC. LIMITED WARRANTY FOR HAUSTED BRAND

SCOPE OF WARRANTY

GF Health Products, Inc. ("GF") warrants to the original purchaser only that it will replace or repair components, at GF's sole discretion, that are defective in material or workmanship under normal use and service. All warranties are conditioned upon the proper use of the products strictly in accordance with good commercial practice and applicable GF instructions and manuals, including proper use and maintenance. To the extent that a third party warrants a component, GF conveys all of its rights under that warranty to the original purchaser, to the extent permitted.

This limited warranty shall only apply to defects that are reported in accordance with the provisions set forth in this warranty document, within the applicable warranty period and which, upon examination by GF or its authorized representative, prove to be a warranty item. (See Obtaining Warranty Service below) This limited warranty is not transferable.

The warranted components and time periods are set forth below:

COMPONENT	PARTS WARRANTY
Frame	5 years
Casters	1 year
Electrical components	2 years
Hydraulics	1 year
Mechanical Components:	3 years
Original and Replacement Upholstered Tops ┼:	1 year
Replacement Parts ‡:	90 days

* Labor is not included in the warranty.

┼ Upholstery is only warranted on material supplied by GF.

‡ The warranty period is as designated above. If a part is replaced under warranty, the original warranty period will not be affected. All other replacement parts will be subject to the warranty period specified.

The applicable warranty period shall commence from date of shipment to the original customer, unless there is an expiration date on the component in which case the warranty shall expire on the earlier of warranty period or the expiration date.

OBTAINING WARRANTY SERVICE

Customers located in the United States who wish to report a warranty issue, must contact GF directly by calling 1.770.368.4700 or by e-mailing a request to cs@grahamfield.com. Customers located outside the United States must contact the Distributor from whom they purchased the products. In both cases, further directions will be provided once the initial contact is made. This limited warranty shall only apply to defects that are reported within the applicable warranty period. Failure to abide by the specific directions will result in denial of the warranty claim.

The warranty does not cover and GF shall not be liable for the following:

1. Defects, damage, or other conditions caused, in whole or in part, by misuse, abuse, negligence, alteration, accident, freight damage, tampering or failure to seek and obtain repair or replacement in a timely manner;
2. Products which are not installed, used, or properly cleaned and maintained as required in the official manual for the applicable product;
3. Products considered to be of a non-durable nature including, but not limited to: filters, fuses, gaskets, lubricants, and charts;
4. Accessories or parts not provided by GF;
5. Matching of color, grain or texture except to commercially acceptable standards;
6. Changes in color caused by natural or artificial light:
7. Charges by anyone for adjustments, repairs, replacement parts, installation or other work performed upon or in connection with such products which are not expressly authorized in writing, in advance, by GF;
8. Any labor or shipping charges incurred in the replacement part installation or repair;
9. Costs and expenses of regular maintenance and cleaning; and
10. Representations and warranties made by any person or entity other than GF.

ENTIRE WARRANTY, EXCLUSIVE REMEDY AND CONSEQUENTIAL DAMAGES DISCLAIMER

THIS WARRANTY IS GF'S ONLY WARRANTY AND IS IN LIEU OF ALL OTHER WARRANTIES, EXPRESS OR IMPLIED. GF MAKES NO IMPLIED WARRANTIES OF ANY KIND INCLUDING ANY IMPLIED WARRANTIES OF MERCHANTABILITY OR FITNESS FOR A PARTICULAR PURPOSE. IF ANY MODEL OR SAMPLE WAS SHOWN TO THE CUSTOMER, SUCH MODEL OR SAMPLE WAS USED MERELY TO ILLUSTRATE THE GENERAL TYPE AND QUALITY OF THE PRODUCT AND NOT TO REPRESENT THAT THE PRODUCT WOULD NECESSARILY CONFORM TO THE MODEL OR SAMPLE IN ALL RESPECTS. THIS WARRANTY IS LIMITED TO THE REPAIR OR REPLACEMENT OF THE DEFECTIVE PARTS. GF SHALL NOT BE LIABLE FOR AND HEREBY DISCLAIMS ANY DIRECT, SPECIAL, INDIRECT, INCIDENTAL, EXEMPLARY OR CONSEQUENTIAL DAMAGES, INCLUDING, BUT NOT LIMITED TO: DAMAGES FOR LOSS OF PROFITS OR INCOME, LOSS OF USE, DOWNTIME, COVER, OR EMPLOYEE OR INDEPENDENT CONTRACTOR WAGES, PAYMENTS AND BENEFITS. CERTAIN STATES MAY CONFER ADDITIONAL RIGHTS REGARDING WARRANTIES AND IN THOSE STATES GF'S LIABILITY AND THE LIABILITY OF GF'S SUPPLIERS, SHALL BE LIMITED TO THE FULLEST EXTENT PERMITTED BY LAW.

The warranties contained herein, together with GF's current Terms and Conditions, contain all the representations and warranties with respect to the subject matter of this document, and supersede all prior negotiations, agreements and understandings with respect thereto. The recipient of this document hereby acknowledges and represents that it has not relied on any representation, assertion, guarantee, warranty, collateral contract or other assurance, except those set out in this document.

For additional information on this product or this warranty, please contact a GF Customer Service Representative.

NOTES:

1) Additional terms and conditions may apply. See GF's General Terms and Conditions on its website: www.grahamfield.com.
2) Freight claims must be notated on the appropriate shipping documents and must be made with immediacy. International, federal and state regulations govern specific requirements for freight claims. Failure to abide by those regulations may result in a denial of the freight claim. GF will assist you in filing the freight claim.
3) Claims for any short shipment must be made within three (3) days of the invoice date.

8 DISPOSAL AND KEY TO SYMBOLS

DISPOSAL

Hausted equipment and accessories can be disposed of.

We recommend disassembling and dividing the equipment and components into different waste groups such as: metal, cable, electronic, recoverable resource and plastic for recycling or combustion.

Most plastic components are provided with a plastic types code and fiber content to aid sorting of plastic parts.

Product	Metal Scrap	Cable Scrap	Electronic Scrap	Plastic Recycling or Combustion
ESC2EYESTR	X	X	X	X

Info: *Lithium batteries contained with the control box should be disposed of in accordance with local regulations.*

KEY TO SYMBOLS

The following symbols are used on Hausted product labels.

	Protective Earth		**Manufacturer**
	Earth Ground		**Keep Dry**
	General Warning Sign		**Fragile, Handle with Care**
CE	**CE Mark**		**Electrical and Electronic Equipment**
ETL CLASSIFIED Intertek	**ETL**		**Consult Instructions for Use**
EU REP	**European Authorized Representative**		**Caution**
	Disconnect before Service		**Pinch Point**
MD	**Medical Device**	UDI	**Unique Device Identifier**

www.hausted.com

www.grahamfield.com

9 APPENDIX

9.1 GUIDANCE AND MANUFACTURER'S DECLARATION — ELECTROMAGNETIC EMISSIONS

The Hausted ESC2EYESTR Surgi-Eye Chair is intended for use in the electromagnetic environment specified below. The customer or the user of the Hausted ESC2EYESTR Surgi-Eye Chair should assure that it is used in such an environment.		
Emissions Test	**Compliance**	**Electromagnetic Environment — Guidance**
RF emissions CISPR 11	**Group 1**	**The Hausted ESC2EYESTR Surgi-Eye Chair uses RF energy only for its internal function. Therefore, its RF emission is very low and are not likely to cause any interference in nearby electronic equipment.** **The Hausted ESC2EYESTR Surgi-Eye Chair is suitable for use in all establishments other than domestic and those directly connected to the public low-voltage power supply network that supplies buildings used for domestic purposes.**
RF emissions CISPR 11	**Class A**	
Harmonic emissions IEC 61000-3-2	**Class A**	
Voltage fluctuations / flicker emissions IEC 61000-3-3	**Complies**	

9.2 ENCLOSURE PORT [1]

Phenomenon	Basic EMC standard or test method	IMMUNITY TEST LEVELS
		Professional healthcare facility environment
ELECTROSTATIC DISCHARGE	IEC 61000-4-2	± 8 kV contact ± 2 kV, ± 4 kV, ± 8 kV, ± 15 kV air
Radiated RF EM fields [a)]	IEC 61000-4-3	3 V/m [f)] 80 MHz – 2,7 GHz [b)] 80 % AM at 1 kHz [c)]
Proximity fields from RF wireless communications equipment	IEC 61000-4-3	See Table 9.3.
RATED power frequency magnetic fields [d) e)]	IEC 61000-4-8	30 A/m [g)] 50 Hz or 60 Hz

a) The interface between the PATIENT physiological signal simulation, if used, and the ME EQUIPMENT or ME SYSTEM shall be located within 0,1 m of the vertical plane of the uniform field area in one orientation of the ME EQUIPMENT or ME SYSTEM.

b) ME EQUIPMENT and ME SYSTEMS that intentionally receive RF electromagnetic energy for the purpose of their operation shall be tested at the frequency of reception. Testing may be performed at other modulation frequencies identified by the RISK MANAGEMENT PROCESS. This test assesses the BASIC SAFETY and ESSENTIAL PERFORMANCE of an intentional receiver when an ambient signal is in the passband. It is understood that the receiver might not achieve normal reception during the test.

c) Testing may be performed at other modulation frequencies identified by the RISK MANAGEMENT PROCESS.

d) Applies only to ME EQUIPMENT and ME SYSTEMS with magnetically sensitive components or circuitry.

e) During the test, the ME EQUIPMENT or ME SYSTEM may be powered at any NOMINAL input voltage, but with the same frequency as the test signal (see Table 1).

f) Before modulation is applied.

g) This test level assumes a minimum distance between the ME EQUIPMENT or ME SYSTEM and sources of power frequency magnetic field of at least 15 cm. If the RISK ANALYSIS shows that the ME EQUIPMENT or ME SYSTEM will be used closer than 15 cm to sources of power frequency magnetic field, the IMMUNITY TEST LEVEL shall be adjusted as appropriate for the minimum expected distance.

9.3 ENCLOSURE PORT IMMUNITY TO RF WIRELESS COMMUNICATIONS EQUIPMENT [1]

Test frequency (MHz)	Band [a)] (MHz)	Service [a)]	Modulation [b)]	Maximum power (W)	Distance (m)	IMMUNITY TEST LEVEL (V/m)
385	380 –390	TETRA 400	Pulse modulation [b)] 18 Hz	1,8	0,3	27
450	430 – 470	GMRS 460, FRS 460	FM [c)] ± 5 kHz deviation 1 kHz sine	2	0,3	28
710	704 – 787	LTE Band 13, 17	Pulse modulation [b)] 217 Hz	0,2	0,3	9
745						
780						
810	800 – 960	GSM 800/900, TETRA 800, iDEN 820, CDMA 850, LTE Band 5	Pulse modulation [b)] 18 Hz	2	0,3	28
870						
930						
1 720	1 700 – 1 990	GSM 1800; CDMA 1900; GSM 1900; DECT; LTE Band 1, 3, 4, 25; UMTS	Pulse modulation [b)] 217 Hz	2	0,3	28
1 845						
1 970						
2 450	2 400 – 2 570	Bluetooth, WLAN, 802.11 b/g/n, RFID 2450, LTE Band 7	Pulse modulation [b)] 217 Hz	2	0,3	28
5 240	5 100 – 5 800	WLAN 802.11 a/n	Pulse modulation [b)] 217 Hz	0,2	0,3	9
5 500						
5 785						

9.4 INPUT AC POWER PORT [1]

Phenomenon	Basic EMC standard	IMMUNITY TEST LEVELS
		Professional healthcare facility environment
Electrical fast transients / bursts [a) l) o)]	IEC 61000-4-4	± 2 kV 100 kHz repetition frequency
Surges [a) b) j) o)] Line-to-line	IEC 61000-4-5	± 0,5 kV, ± 1 kV
Surges [a) b) j) k) o)] Line-to-ground	IEC 61000-4-5	± 0,5 kV, ± 1 kV, ± 2 kV
Conducted disturbances induced by RF fields [c) d) o)]	IEC 61000-4-6	3 V [m)] 0,15 MHz – 80 MHz 6 V [m)] in ISM bands between 0,15 MHz and 80 MHz [n)] 80 % AM at 1 kHz [e)]
Voltage dips [f) p) r)]	IEC 61000-4-11	0 % U_T; 0,5 cycle [g)] At 0°, 45°, 90°, 135°, 180°, 225°, 270° and 315° [q)]
		0 % U_T; 1 cycle and 70 % U_T; 25/30 cycles [h)] Single phase: at 0°
Voltage interruptions [f) i) o) r)]	IEC 61000-4-11	0 % U_T; 250/300 cycle [h)]

a) The test may be performed at any one power input voltage within the ME EQUIPMENT or ME SYSTEM RATED voltage range. If the ME EQUIPMENT or ME SYSTEM is tested at one power input voltage, it is not necessary to re-test at additional voltages.

b) All ME EQUIPMENT and ME SYSTEM cables are attached during the test.

c) Calibration for current injection clamps shall be performed in a 150 Ω system.

d) If the frequency stepping skips over an ISM or amateur band, as applicable, an additional test frequency shall be used in the ISM or amateur radio band. This applies to each ISM and amateur radio band within the specified frequency range.

e) Testing may be performed at other modulation frequencies identified by the RISK MANAGEMENT PROCESS.

f) ME EQUIPMENT and ME SYSTEMS with a d.c. power input intended for use with a.c.-to-d.c. converters shall be tested using a converter that meets the specifications of the MANUFACTURER of the ME EQUIPMENT or ME SYSTEM. The IMMUNITY TEST LEVELS are applied to the a.c. power input of the converter.

g) Applicable only to ME EQUIPMENT and ME SYSTEMS connected to single-phase a.c. mains.

h) E.g. 10/12 means 10 periods at 50 Hz or 12 periods at 60 Hz.

i) ME EQUIPMENT and ME SYSTEMS with RATED input current greater than 16 A / phase shall be interrupted once for 250/300 cycles at any angle and at all phases at the same time (if applicable). ME EQUIPMENT and ME SYSTEMS with battery backup shall resume line power operation after the test. For ME EQUIPMENT and ME SYSTEMS with RATED input current not exceeding 16 A, all phases shall be interrupted simultaneously.

9.4 CONTINUED

j) ME EQUIPMENT and ME SYSTEMS that do not have a surge protection device in the primary power circuit may be tested only at ± 2 kV line(s) to earth and ± 1 kV line(s) to line(s).

k) Not applicable to CLASS II ME EQUIPMENT and ME SYSTEMS.

l) Direct coupling shall be used.

m) r.m.s., before modulation is applied.

n) The ISM (industrial, scientific and medical) bands between 0,15 MHz and 80 MHz are 6,765 MHz to 6,795 MHz; 13,553 MHz to 13,567 MHz; 26,957 MHz to 27,283 MHz; and 40,66 MHz to 40,70 MHz. The amateur radio bands between 0,15 MHz and 80 MHz are 1,8 MHz to 2,0 MHz, 3,5 MHz to 4,0 MHz, 5,3 MHz to 5,4 MHz, 7 MHz to 7,3 MHz, 10,1 MHz to 10,15 MHz, 14 MHz to 14,2 MHz, 18,07 MHz to 18,17 MHz, 21,0 MHz to 21,4 MHz, 24,89 MHz to 24,99 MHz, 28,0 MHz to 29,7 MHz and 50,0 MHz to 54,0 MHz.

o) Applicable to ME EQUIPMENT and ME SYSTEMS with RATED input current less than or equal to 16 A / phase and ME EQUIPMENT and ME SYSTEMS with RATED input current greater than 16 A / phase.

p) Applicable to ME EQUIPMENT and ME SYSTEMS with RATED input current less than or equal to 16 A / phase.

q) At some phase angles, applying this test to ME EQUIPMENT with transformer mains power input might cause an overcurrent protection device to open. This can occur due to magnetic flux saturation of the transformer core after the voltage dip. If this occurs, the ME EQUIPMENT or ME SYSTEM shall provide BASIC SAFETY during and after the test.

r) For ME EQUIPMENT and ME SYSTEMS that have multiple voltage settings or auto ranging voltage capability, the test shall be performed at the minimum and maximum RATED input voltage. ME EQUIPMENT and ME SYSTEMS with a RATED input voltage range of less than 25 % of the highest RATED input voltage shall be tested at one RATED input voltage within the range. See Table 1 Note c) for examples calculations.

9.5 PATIENT COUPLING PORT [1]

Phenomenon	Basic EMC standard	IMMUNITY TEST LEVELS
		Professional healthcare facility environment
ELECTROSTATIC DISCHARGE [c)]	IEC 61000-4-2	± 8 kV contact ± 2 kV, ± 4 kV, ± 8 kV, ± 15 kV air
Conducted disturbances induced by RF fields [a)]	IEC 61000-4-6	3 V [b)] 0,15 MHz – 80 MHz 6 V [b)] in ISM bands between 0,15 MHz and 80 MHz 80 % AM at 1 kHz

a) The following apply:

- All PATIENT-COUPLED cables shall be tested, either individually or bundled
- PATIENT-COUPLED cables shall be tested using a current clamp unless a current clamp is not suitable. In cases were a current clamp is not suitable, an EM clamp shall be used.
- No intentional decoupling device shall be used between the injection point and the PATIENT COUPLING POINT in any case.
- Testing may be performed at other modulation frequencies identified by the RISK MANAGEMENT PROCESS.
- Tubes that are intentionally filled with conductive liquids and intended to be connected to a PATIENT shall be considered to be PATIENT-COUPLED cables.
- If the frequency stepping skips over an ISM or amateur radio band, as applicable, an additional test frequency shall be used in the ISM or amateur radio band. This applies to each ISM and amateur radio band within the specified frequency range.
- The ISM (industrial, scientific and medical) bands between 0,15 MHz and 80 MHz are 6,765 MHz to 6,795 MHz; 13,553 MHz to 13,567 MHz; 26,957 MHz to 27,283 MHz; and 40,66 MHz to 40,70 MHz. The amateur radio bands between 0,15 MHz and 80 MHz are 1,8 MHz to 2,0 MHz, 3,5 MHz to 4,0 MHz, 5,3 MHz to 5,4 MHz, 7 MHz to 7,3 MHz, 10,1 MHz to 10,15 MHz, 14 MHz to 14,2 MHz, 18,07 MHz to 18,17 MHz, 21,0 MHz to 21,4 MHz, 24,89 MHz to 24,99 MHz, 28,0 MHz to 29,7 MHz and 50,0 MHz to 54,0 MHz.

b) r.m.s., before modulation is applied

c) Discharges shall be applied with no connection to an artificial hand and no connection to PATIENT simulation. PATIENT simulation may be connected after the test as needed in order to verify BASIC SAFETY and ESSENTIAL PERFORMANCE.

9.6 SIGNAL INPUT / OUTPUT PARTS PORT [1]

Phenomenon	Basic EMC standard	IMMUNITY TEST LEVELS
		Professional healthcare facility environment
ELECTROSTATIC DISCHARGE [e)]	IEC 61000-4-2	± 8 kV contact ± 2 kV, ± 4 kV, ± 8 kV, ± 15 kV air
Electrical fast transients / bursts [b) f)]	IEC 61000-4-4	± 1 kV 100 kHz repetition frequency
Surges Line-to-ground [a)]	IEC 61000-4-5	± 2 kV
Conducted disturbances induced by RF fields [b) d) g)]	IEC 61000-4-6	3 V [h)] 0,15 MHz – 80 MHz 6 V [h)] in ISM bands between 0,15 MHz and 80 MHz [i)] 80 % AM at 1 kHz [c)]

a) This test applies only to output lines intended to connect directly to outdoor cables.

b) SIP/SOPS whose maximum cable length is less than 3 m in length are excluded.

c) Testing may be performed at other modulation frequencies identified by the RISK MANAGEMENT PROCESS.

d) Calibration for current injection clamps shall be performed in a 150 Ω system.

e) Connectors shall be tested per 8.3.2 and Table 4 of IEC 61000-4-2:2008. For insulated connector shells, perform air discharge testing to the connector shell and the pins using the rounded tip finger of the ESD generator, with the exception that the only connector pins that are tested are those that can be contacted or touched, under conditions of INTENDED USE, by the standard test finger shown in Figure 6 of the general standard, applied in a bent or straight position.

f) Capacitive coupling shall be used.

g) If the frequency stepping skips over an ISM or amateur radio band, as applicable, an additional test frequency shall be used in the ISM or amateur radio band. This applies to each ISM and amateur radio band within the specified frequency range.

h) r.m.s., before modulation is applied.

i) The ISM (industrial, scientific and medical) bands between 150 kHz and 80 MHz are 6,765 MHz to 6,795 MHz; 13,553 MHz to 13,567 MHz; 26,957 MHz to 27,283 MHz; and 40,66 MHz to 40,70 MHz. The amateur radio bands between 0,15 MHz and 80 MHz are 1,8 MHz to 2,0 MHz, 3,5 MHz to 4,0 MHz, 5,3 MHz to 5,4 MHz, 7 MHz to 7,3 MHz, 10,1 MHz to 10,15 MHz, 14 MHz to 14,2 MHz, 18,07 MHz to 18,17 MHz, 21,0 MHz to 21,4 MHz, 24,89 MHz to 24,99 MHz, 28,0 MHz to 29,7 MHz and 50,0 MHz to 54,0 MHz.

9.7 RECOMMENDED SEPARATION DISTANCES BETWEEN PORTABLE AND MOBILE RF COMMUNICATIONS EQUIPMENT AND HAUSTED ESC2EYESTR SURGI-EYE CHAIR [1]

The Hausted ESC2EYESTR Surgi-Eye Chair is intended for use in an electromagnetic environment in which radiated RF disturbances are controlled. The customer or the user of the Hausted ESC2EYESTR Surgi-Eye Chair can help prevent electromagnetic interference by maintaining a minimum distance between portable and mobile RF communications equipment (transmitters) and the Hausted ESC2EYESTR Surgi-Eye Chair as recommended below, according to the maximum output power of the communications equipment.

Rated maximum output power of transmitter (W)	Separation distance according to frequency of transmitter (m)		
	150 kHz to 80 MHz $d = 1.2\sqrt{P}$	80 MHz to 800 MHz $d = 1.2\sqrt{P}$	800 MHz to 2.7 GHz $d = 2.3\sqrt{P}$
0,01	0.12	0.12	0.23
0,1	0.38	0.38	0.73
1	1.2	1.2	2.3
10	3.8	3.8	7.3
100	12	12	23

For transmitters rated at a maximum output power not listed above, the recommended separation distance d in meters (m) can be estimated using the equation applicable to the frequency of the transmitter, where P is the maximum output power rating of the transmitter in watts (W) according to the transmitter manufacturer.

NOTE 1: At 80 MHz and 800 MHz, the higher frequency range applies.

NOTE 2: These guidelines may not apply in all situations. Electromagnetic propagation is affected by absorption and reflection from structures, objects, and people.

9.8 CERTIFICATIONS

STANDARD	Medical Electrical Equipment - Part 1: General Requirements For Basic Safety And Essential Performance [AAMI ES60601-1:2005+A1]
	Medical Electrical Equipment - Part 1: General Requirements For Basic Safety And Essential Performance [CSA C22.2#60601-1-2014 Ed:3]
	Medical Electrical Equipment - Part 2-46: Particular Requirements For The Basic Safety And Essential Performance Of Operating Tables [IEC 60601-2-46:2016]
	Medical Electrical Equipment - Part 1-6: General Requirements For Basic Safety And Essential Performance - Collateral Standard: Usability [IEC 60601-1-6:2010 Ed.3+A1]
PRODUCT	Electrical Surgical Chair
BRAND NAME	Hausted by Graham-Field
MODEL	ESC2EYESTR
EQUIPMENT DESIGNATION	ESC2EYESTR to IEC 60601-1-2:2014 Class A for Emissions, Immunity for Professional Healthcare Facility Environment
	EN 60601-1-2:2015 / IEC 60601-1-2 [ed.4] - 2014 Clause 5 ME Equipment and ME Systems identification, marking and documents

10 INDEX

A
Accessories, optional, list 26
Advisory 4
Appendix 33
A word from GF Health Products, Inc. 4
B
Back, emergency drop 22
BACK SECTION UP/DOWN buttons 18
Battery replacement 28
BRAKE operation button 20
C
Caster pedal positions 15
CAUTION statement, significance 5
Certifications 38
Control Box 28
D
DANGER statement, significance 5
DANGER / WARNING / CAUTION / NOTICE Summary 5
Disposal 32
E
Electric Control Locations 16
Electromagnetic compatibility (EMC) information 7
Electromagnetic emissions, guidance and manufacturer's declaration 33
Emergency Drop Back 21
Environmental conditions 8
F
Foot control plug-in and storage location 16
Footrest, adjustable 21
Footrest, repositioning 21
H
Hand grips, rotating and positioning 25
Headrest 24
Headrest, adjusting 24
Height and patient surface adjustment 18
HEIGHT (HI/LO) UP and DOWN buttons 18
HOME Button 20
I
Identification label 10
Identification label location 10
Indications for Use 4
Info statement, significance 5
IV rod, #18 (optional accessory), installing 26
L
Leg extension, adjustable 22
Leg extension, extending 22
Leg extension, operation 22
Leg extension, repositioning 22
Leg extension, retracting 22
Leg UP / DOWN Buttons 19
Limited warranty 35
LOCK / UNLOCK button 20
M
MEMORY & PRESET Buttons 20
N
NOTICE statement, significance 5
O
Operating instructions 9
Optional Accessories 30
P
Pivoting rail, lowering 23
Pivoting rail, raising 23
Preventive maintenance for the user 29
Push handles 25
Push handles, operating 25
Q
Quick drop activation 22
S
Safety limits 22
Safety statements, significance of 5
Safety straps (optional accessory), using 29
SEAT TILT UP/DOWN buttons 19
Service information 4
Service life, expected 4
Steer mode, deactivate 15
STEER MODE operation button 20
Symbol key, Hausted product labels 32
T
Troubleshooting guide 27
U
Uncrating instructions 8
UNLOCK button 20
Unpacking instructions 8
W
Warnings 5
WARNINGS and CAUTIONS, list 5
WARNING statements 5
WARNING statement, significance 5
Warranty, limited 31
Wrist rest (optional accessory), adjusting 26
Wrist rest (optional accessory), mounting 26

Hausted® by graham-field

gf™ Proudly Made in the USA

Manufactured By:
GF Health Products, Inc.
1 Graham Field Way, Atlanta, GA 30340
Made in USA

© 2020, GF Health Products, Inc. All Rights Reserved.
Hausted is a registered trademark of GF Health Products, Inc.

HP_ESC2EYEST-INS-LAB-Rev126

+1 770.368.4700

Information contained herein is subject to change without notice.
The most current and complete product information can be found on our website.

www.hausted.com | www.grahamfield.com

graham field™